1-Local / Remote Shared Access 8 / 16 Port Multi-Interface Cat 5 Dual Rail LCD KVM over IP Switch

KL1508Ai (KL1508AiM: 17" LCD; KL1508AiN: 19" LCD)
KL1516Ai (KL1516AiM: 17" LCD; KL1516AiN: 19" LCD)

The KL1508Ai and KL1516Ai Dual Rail LCD KVM Switches are control units that allow secure access up to 8 / 16 computers from a single KVM (keyboard, video, and mouse) console. They consist of an integrated LED-backlit LCD monitor, keyboard, and touchpad in a 1U rack-mountable retractable sliding housing.

The LCD and keyboard / touchpad modules slide independently of each other. To maximize space in your data center, the keyboard / touchpad module slides back to "hide away" when not in use, while the thin profile LCD monitor rotates back – flush against the rack – allowing convenient monitoring of computer activity.

The KL1508Ai / KL1516Ai features IP-based connectivity that allows local and remote operators to monitor and access the computers on your installation. Because it uses TCP / IP for its communications protocol, the KL1508Ai / KL1516Ai can be accessed from any computer on the LAN, WAN, or Internet – whether that computer is located down the hall, down the street, or halfway around the world.

Compact, high-density, RJ-45 connectors and Cat 5e / 6 cable make for a compact, efficient, wiring configuration, while the use of KVM Adapters to link to the computers, permits any combination of PCs, Macs, Sun computers, and serial devices to coexist on the installation.

For added convenience, ports for an external keyboard, monitor, and mouse are provided on the rear panel – permitting you to manage the switch from a local console. There is also an external USB mouse port on the keyboard module, allowing you to use an external mouse, rather than the touchpad.

Enhanced features include a Panel Array Mode™ that displays the video output of up to 8 / 16 computers at the same time, and a Message Board that allows logged in users to conveniently and instantly communicate with one other – no matter where in the world they actually are. The KL1508Ai / KL1516Ai is an ideal solution for your server room management.

KL1516Ai Front view



KL1516Ai Rear view



Features

Hardware

- Exclusive LED illumination light – designed by ATEN to illuminate the keyboard and touchpad to allow visibility in low-light conditions
- Integrated KVM console with 17" or 19" LED-backlit LCD monitor in a Dual Rail housing
- A single console controls up to 8 (KL1508Ai) or 16 (KL1516Ai) computers
- Daisy chain up to 15 additional KVM switches to control up to 128 / 256 computers[1]
- One bus for remote KVM over IP access
- Space-saving RJ-45 connectors and Cat 5e / 6 cabling
- KVM adapters designed with automatic conversion to allow flexible interface combinations (PS/2, USB, Sun and serial) to control all computer types
- Extra console port – manage computers in the LCD KVM switch from an external console (monitor, USB or PS/2 keyboard, and USB or PS/2 mouse)
- Multiplatform support: PC, Mac, Sun and Serial
- Supports external USB mouse
- Dual Rail housing is slightly less than 1U with top and bottom clearance for smooth operation in 1U of rack space
- Dual Rail – LCD monitor slides independently of the keyboard / touchpad
- LCD module rotates up to 120 degrees for a more comfortable viewing angle
- Console lock – enables the console drawer to remain securely locked away in position when not in use
- LCD power button helps save energy and prolong displays' life
- Superior Video Quality – supports input video resolutions up to 1920 x 1200 @ 60Hz[2] up to 30 meters, 1600 x 1200 @ 60Hz up to 40 meters, and 1280 x 1024 @ 75Hz up to 50 meters
- Optional rack mount kits available including easy installation options

Note:

1. Compatible KVM switches: KH1508A / KH1516A, CS1708A / CS1716A
2. With KVM Adapter KA71xx or KA75xx series; please check the product label to ensure it's the FHD version

Management

- Up to 64 user accounts
- Up to 32 concurrent logins
- End session feature – administrators can terminate any running session
- Adapter ID – stores port information allowing administrators to relocate servers to different ports, without having to reconfigure the adapters and switch
- Port Share Mode allows multiple users to gain access to a server simultaneously
- Remote power control for attached Power Over the NET™ devices
- Integration with ATEN CC2000 Management software
- Event logging and Windows-based Log Server support
- Local Log Event
- Firmware upgradeable
- IPv6 capable

Easy-to-Use Interface

- Easy computer selection via pushbuttons, Hotkey Mode, OSD (OnScreen Display), and Browser-based GUI
- Local Console, Browser, and AP GUIs offer a unified multi-language interface to minimize user training time and increase productivity
- Multiplatform client support (Windows, Mac OS X, Linux, Sun)
- Multi-browser support: Internet Explorer, Chrome, Firefox, Safari, Opera, Edge
- Browser-based UI in pure Web technology allows administrators to perform administrative tasks without the need for Java to be pre-installed
- Panel Array Mode™
- Keyboard broadcast* – keyboard input can be duplicated on all the attached servers

Note: Local Console only

Advanced Security

- Remote authentication support: RADIUS, LDAP, LDAPS, and MS Active Directory
- Supports TLS 1.2 data encryption, along with 2048-bit RSA certificates, ensuring secure data transmission during browser login
- Flexible encryption allows users to enable or disable video encryption, while keyboard and mouse data remain encrypted at all times
- IP / MAC Filter support for enhanced security protection
- Configurable user and group permissions for server access and control

Virtual Remote Desktop

- Video quality and video tolerance can be adjusted to optimize data transfer speed; monochrome color depth setting, threshold and noise settings for compression of the data bandwidth in low bandwidth situations
- Full-screen or sizable and scalable Virtual Remote Desktop
- Message board feature allows logged in users to communicate with each other
- Mouse DynaSync™ – automatically synchronizes the local and remote mouse movements
- On-screen keyboard with multi-language support
- BIOS-level access
- Supports the following keyboard languages: English (UK), English (US), French, German (Germany), German (Switzerland), Hungarian, Italian, Japanese, Korean, Russian, Spanish, Swedish, and Traditional Chinese

Highlights

Space Efficient	The KL1508Ai / KL1516Ai provides a streamlined method to conserve server room rack space by integrating a retractable LCD monitor, keyboard, and touchpad in a 1U Dual Rail housing that is designed to install easily and operate smoothly.
Convenient Monitoring	The Dual Rail system separates the LCD module from keyboard / touchpad module so they can move independently of each other. This allows the keyboard / touchpad to be pushed back into the housing and out of the way when not in use, while the LCD screen can be rotated up to the rack for convenient monitoring of server operation – the LCD module's range of rotation is adjustable to provide the best viewing angle.
Enhanced Console Control	The extra console ports provide administrators with the ability to use a standard keyboard / monitor / mouse console, if they like. Other, even more powerful options for the external console ports are to connect a KVM extender.
Easy Cabling	The KL1508Ai / KL1516Ai features RJ-45 connectors and Cat 5e / 6 cable to link to the computers. Utilizing PS/2, USB, and serial KVM adapters for the final linkup, the KL1508Ai / KL1516Ai reduces cable bulk and simplifies cable management.
KVM Adapters with ID	The KL1508Ai / KL1516Ai supports automatic ID recognition of the ATEN KVM Adapter KA7000 series. Using the new adapters with ID means it is not required to change adapter configuration settings when moving adapters from port to port– allowing you to hot-swap port connections without having to reconfigure attributes.
Panel Array Mode™	Panel Array Mode™ permits simultaneous monitoring of the video output of the installations' servers. Operators can monitor the screen display of up to 8 / 16 servers for real-time server monitoring.
Mouse DynaSync™	Automatically synchronizes the local and remote mouse movements for perfect alignment of mouse pointers, regardless of server mouse acceleration settings.
Message Board	To alleviate the problem of access conflicts arising from multiple logins, the Message Board functions like an Internet chat program, allowing users who are logged in to instantly communicate with each other.
Easy Operation	• Computer selection via front panel pushbuttons, hotkeys, and multi-lingual onscreen display (OSD) menu • Supports the following keyboard languages: English (UK), English (US), French, German (Germany), German (Switzerland), Hungarian, Italian, Japanese, Korean, Russian, Spanish, Swedish, and Traditional Chinese.

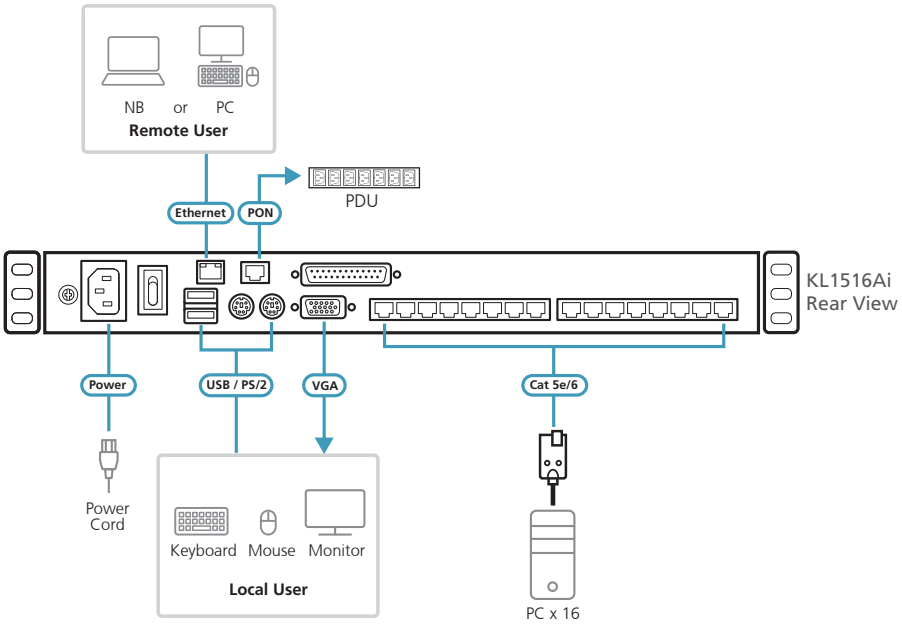

Optional

Rack Mount Kits

LCD KVM Switches allow you to choose from a host of optional rack mount kits to meet your needs, including the Single Person Easy Installation Rack Mount Kit, which streamlines the rack mounting process.

Normal rack mounting procedures call for at least two people to rack mount a KVM switch. The Single Person Easy Installation Rack Mount Kit enables one person to rack mount a LCD KVM Switch. In just a matter of minutes, your new LCD KVM Switch can go from the box to the rack.

For convenience and flexibility, there is one standard, and three optional rack mounting kits available:



KVM Adapters

The following KVM Adapters are required for use with the KL1508Ai / KL1516Ai:

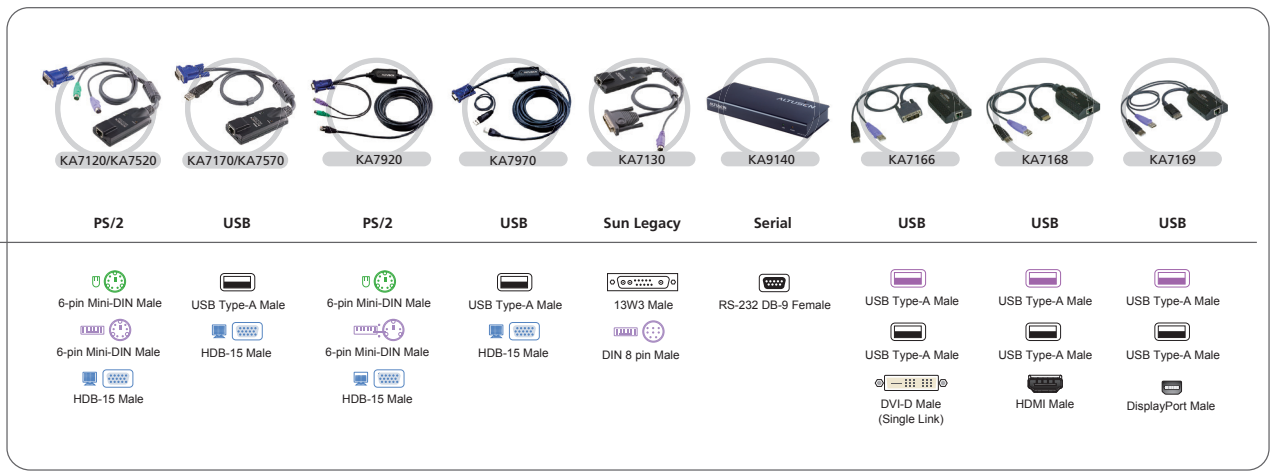

Specifications

	KL1508AiM	KL1508AiN	KL1516AiM	KL1516AiN
Console Connections				
Local	1 (Share Remote Bus)			
Remote	1			
Computer Connections				
Direct	8		16	
Maximum	128 (via Daisy-chain)		256 (via Daisy-chain)	
Port Selection	OSD, Hotkey, Pushbuttons			
Connectors				
Console Ports	2 x USB Type-A Female (White); 1 x 6-pin Mini-DIN Female (Purple); 1 x 6-pin Mini-DIN Female (Green); 1 x HDB-15 Female (Blue)			
External Mouse Port	1 x USB Type-A Female			
KVM Ports	8 x RJ-45 Female		16 x RJ-45 Female	
Daisy Chain Ports	1 x DB-25 Male			
PON	1 x RJ-45 Female			
Firmware Upgrade	1 x RJ-11 Female			
LAN Ports	1 x RJ-45 Female			
Power	1 x IEC 60320/C14			
Switches				
Port Selection	8 x Pushbutton		16 x Pushbutton	
Station Selection	2 x Pushbutton			
Reset	1 x Semi-recessed Pushbutton			
Firmware Upgrade	1 x Slide Switch			
Power	1 x Rocker Switch			
LCD Power	1 x Pushbutton			
LCD Adjustment	4 x Pushbutton			
LEDs				
Online	8 (Green)		16 (Green)	
Selected	8 (Orange)		16 (Orange)	
Station Selection	2 x 7 Segments (Orange)			
Link	1 (Green)			
10 / 100 / 1000 Mbps	Non-FHD:10 / 100 Mbps (Orange / Green) FHD:100 / 1000 Mbps (Orange / Green)			
Power	1 (Blue)			
LCD Power	1 (Orange)			
Lock	1 x Num Lock (Green); 1 x Caps Lock (Green); 1 x Scroll Lock (Green)			
Video				
Local	1600 x 1200 @ 60Hz (non-FHD version) 1920 x 1200 @ 60Hz (FHD version)			
Remote				
Panel Spec				
LCD Module	17" TFT-LCD	19" TFT-LCD	17" TFT-LCD	19" TFT-LCD
Resolution	1280 x 1024 @ 75Hz			
Pixel Pitch	0.264 mm x 0.264 mm	0.294 mm x 0.294 mm	0.264 mm x 0.264 mm	0.294 mm x 0.294 mm
Response time	5 ms			
Viewing Angle	170° (H), 160° (V)			
Support Color	16.7M colors			
Contrast Ratio	1000:1			
Luminance	250 cd/m^2			
Emulation				
Keyboard / Mouse	PS/2; USB			
Scan Interval	1 – 255 sec.			
Maximum Input Power Rating	100 – 240V AC, 50 – 60Hz, 1A			
Power Consumption	AC110V:21.1W	AC110V:24.3W	AC110V:21.2W	AC110V:24.4W
	AC220V:22.2W	AC220V:24.5W	AC220V:23.1W	AC220V:25.4W
Environmental				
Operating Temperature	0 – 40 °C			
Storage Temperature	-20 – 60 °C			
Humidity	0 – 80% RH, Non-condensing			
Physical Properties				
Housing	Metal			
Weight	15.23 kg	15.39 kg	15.24 kg	15.40 kg
Dimensions (L x W x H)	48.00 x 70.12 x 4.40 cm			

Note: For some of rack mount products, please note that the standard physical dimensions of WxDxH are expressed using a LxWxH format.

ATEN International Co., Ltd.
3 F., No. 125, Sec. 2, Datong Rd., Xizhi Dist., New Taipei City 221, Taiwan
Phone: 886-2-8692-6789 Fax: 886-2-8692-6767
www.aten.com E-mail: marketing@aten.com

Product information is subject to change without prior notice.

Released: 11/2026 V13.0

© Copyright 2026 ATEN® International Co. Ltd.
ATEN and the ATEN logo are registered trademarks of ATEN International Co., Ltd.
All rights reserved. All other trademarks are the property of their respective owners.