1-Local/1-Remote Access 8/16-Port Multi-Interface Cat 5 Dual Rail LCD KVM over IP Switch

KL1108VN / KL1116VN

ATEN's KL1108VN / KL1116VN 8/16-port Cat 5 Dual Rail LCD KVM over IP Switch features an independently retractable, dual slide 19" LED-backlit LCD monitor and keyboard with built-in touchpad.

The KL1108VN and KL1116VN switches allow local console and remote over IP access for operators to monitor and manage their entire data center locally at the switch, and over a network using a web-based browser. In addition, they offer out-of-band access with external modem support for BIOS-level troubleshooting when the network is down.

To help manage and control an entire data center, our KL1108VN / KL1116VN KVM over IP switches support blade servers and chassis with powerful new features such as Power Association which allows KVM ports to be associated with ATEN PDU power outlets for power management of servers from the KVM switches' user interface.

The KL1108VN and KL1116VN KVM over IP switches now support the new Control Center Video Session Recorder (CCVSR) and CC2000 Centralized Management Software. The CC2000 puts administrators in complete control of remote data centers and branch offices no matter where they are in the world – allowing them to remotely monitor and control all devices on a network, including blade server chassis, individual blades and virtual machines. The CCVSR records all operations on servers accessed through KVM over IP switches. Every operation and change from the BIOS level to logging in, from running software applications to configuring the operating system is recorded and saved to a secure video file as evidence, without exception.

In addition, the KL1108VN / KL1116VN is compatible with ATEN's KVM over IP Console Station, the KA82 series. The KA82 series is a hardware-based standalone console solution that can centrally manages multiple KL1108VN / KL1116VN. It is especially suitable for environments where a PC is not allowed. The KVM over IP Console Station features a 0U space-saving compact design and low power consumption for 24/7 operations.

The Virtual Media function lets you map to storage media on USB, hard disk and DVD / CD drives located on remote servers – allowing administrators to conduct file transfers, install applications, run O.S. updates, or perform diagnostics across a network with ease.

Enhanced capabilities of KVM over IP switches also include: a Message Board, Panel Array Mode™, Mouse DynaSync™, Adapter ID and Secure Serial Server Access. The secure access to serial-controlled devices includes network equipment, UNIIX servers, Linux servers, Sun servers and many more serial consoles. It provides installation without needing expensive serial dongles.

With dual on-board NICs and out-of-band access with external modem support, the KVM over IP switches are built for reliability, to ensure 24/7 availability of remote access to all server room computers.

With ATEN KVM over IP switches, IT administrators can manage their server rooms and data centers from practically anywhere – minimizing travel costs and MTTR (Mean Time to Repair) – ensuring the highest availability of data center services possible.

KL1116VN Front view



KL1116VN Rear View



Features

Exclusive Features

- High-Grade Security – supports FIPS 140-2 level 1 security standards that use an embedded FIPS 140-2 certified OpenSSL cryptographic module (Certificate #1747, #2398, #2473, and#4282)
- Advanced FPGA graphics processor with HD resolutions up to 1920 x 1200
- 2x faster virtual media transmission speeds

Hardware

- Exclusive LED illumination light designed by ATEN to illuminate the keyboard and touchpad to allow visibility in lowlight conditions
- Integrated KVM console with 19" LED-backlit LCD monitor in a dual rail housing
- One bus for local and one bus for remote KVM over IP access
- Space-saving RJ-45 ports for Cat 5e/6 cable connections
- KVM adapter with automatic conversion allow flexible interface combinations (PS/2, USB, Sun and serial) to control all computer types
- Extra Console Ports – manage computers from the built-in LCD screen or an external console setup (monitor, USB keyboard and mouse)
- Supports PS/2, USB, Sun Legacy (13W3) and serial (RS-232) connectivity
- Supports external USB mouse
- Dual rail housing is slightly less than 1U with top and bottom clearance for smooth operation in 1U of rack space
- Dual Rail Housing – allows the LCD monitor to slide independently of the keyboard and touchpad
- LCD module rotates up to 120 degrees for a more comfortable viewing angle
- Console lock enables the console drawer to remain securely locked away when not in use
- LCD power button saves energy and prolongs the life of the display
- High Port Density – RJ-45 connectors provide up to 16 ports in 1U housing
- Two 10/100/1000 Mbps NICs for redundant LAN or dual IP operation
- Blade server support
- Supports multiplatform server environments: Windows, Mac, Sun, Linux and VT100 based serial devices
- High Video Resolutions – up to 1920 x 1200 @ 60 Hz with 24-bit color depth at the switch's external local console and on remote displays; up to 1280 x 1024 @ 75 Hz at the switch's built-in LCD screen
- Monitor and control up to 16 computers on a single level or control up to 256 computers in a cascade*
- Optional rack mount kits available including easy installation options

Note: Cascade-compatible KVM switches include the following: CS1308, CS1316, KH1508A and KH1516A.

Management

- Up to 64 user accounts
- Up to 32 concurrent users share control
- End Session Feature – administrators can terminate any remote session
- Port Share Mode allows multiple users to gain access to a server simultaneously
- Remote power control for attached ATEN PDU devices
- Integration with CC2000 Centralized Management Software
- Integration with ATEN CCVSR Video Session Recording Software*
- Supports ATEN KVM over IP Console Station (KA8270 / KA8280 / KA8278 / KA8288)
- Event logging and Windows-based Log Server support
- Local Log Event
- Firmware upgradeable
- IPv6 capable
- Critical system event notification via SMTP email; SNMP trap and Syslog support
- Customizable events notification

- Out-of-Band Access – modem dial-in / dial-out / dial-back support
- Adapter ID Function – stores port information, allowing administrators to relocate servers to different ports without having to re-configure adapters or switches

Note: Supports recording computer operations accessed via remote sessions.

Easy-to-Use Interface

- Easy computer selection via pushbuttons, OSD (On-Screen Display), and Browser-based GUI
- Local console, browser, and AP GUIs offer a unified multi-language interface to minimize user training time and increase productivity
- Multiplatform client support (Windows, Mac OS X, Linux, Sun)
- Multi-browser support: Internet Explorer, Chrome, Firefox, Safari, Opera, Netscape
- Browser-based UI in pure Web technology allows administrators to perform administrative tasks without the need for Java to be pre-installed
- Supports web-friendly KVM-over-IP access with HTML5 WebClient viewer – users can remotely access all the connected servers and PCs without Java or browser plug-in installation
- ATEN Exclusive Panel Array™ Mode – monitor all ports in a grid display of all desktops at both the local and remote screen
- Keyboard / Mouse Broadcast – keyboard and mouse signals can be duplicated across all servers at once
- Launch virtual remote desktop sessions to control multiple servers at the same time
- Full screen or scalable virtual remote desktop window
- Video syncing allows the local console monitor's EDID information to be stored on the KVM Adapter for display resolution optimization

Advanced Security

- Remote authentication support: RADIUS, LDAP, LDAPS and Microsoft Active Directory
- Supports TLS 1.2 / 1.3 encryption and RSA 2048-bit certificates to secure browser logins
- Flexible encryption design allows users to choose any combination of 56-bit DES, 168-bit 3DES, 256-bit AES, 128-bit RC4 or Random for independent Keyboard / Mouse, video and virtual media data encryption
- Configurable user and group permissions for server access and control
- Automated CSR creation utility and third-party CA certificate authentication
- IP/MAC Filter support for enhanced security protection

Virtual Media

- Virtual media enables file application, OS patching, software installations and diagnostic testing
- Works with USB-enabled servers at the operating system and BIOS level
- Supports DVD / CD drives, USB mass storage devices, hard drives and ISO images
- Supports Smart Card / CAC Reader

Virtual Remote Desktop

- Video quality can be adjusted to optimize data transfer speeds; color depth, threshold and noise settings reduce data transmission to lower bandwidth
- Full screen or scalable window for virtual remote desktop
- Message board feature allows logged in users to communicate with each other
- Mouse DynaSync™ – automatically synchronizes the local and remote mouse movements
- Exit Macro support
- Supports the following keyboard languages: English (UK), English (US), French, German (Germany), German (Switzerland), Hungarian, Italian, Japanese, Korean, Spanish, Swedish, Traditional Chinese, and Turkish
- BIOS-level access for troubleshooting

Highlights

Space Efficient	The KL1108VN / KL1116VN provides a streamlined method to conserve server room rack space by integrating a retractable LCD monitor, keyboard, and touchpad in a 1U dual rail housing that is designed to install easily and operate smoothly.
Convenient Monitoring	The dual rail system separates the LCD module from the keyboard / touchpad module so they can move independently of each other. This allows the keyboard / touchpad to be pushed back into the housing and out of the way when not in use, while the LCD screen can be rotated up to the rack for convenient monitoring of server operations – the LCD module's range of rotation is adjustable to provide the best viewing angle.
Enhanced Console Control	The extra console ports provide administrators with the ability to use a standard keyboard/monitor/mouse console, if they like. New powerful options allow the external console ports to connect to a KVM extender.
Easy Cabling	The KL1108VN / KL1116VN features RJ-45 connectors for Cat 5e/6 cable to connect computers up to 50 meters from the switch. Utilizing PS/2, USB, and serial KVM adapter for the final linkup, the KL1108VN / KL1116VN reduces cable bulk and simplifies cable management.
Easy Operation	• Computer selection via front panel pushbuttons, hotkeys, and multilingual onscreen display (OSD) menu • Supports the following keyboard languages: English (UK), English (US), French, German (Germany), German (Switzerland), Hungarian, Italian, Japanese, Korean, Spanish, Swedish, Traditional Chinese, and Turkish.
High-Grade Security	FIPS 140-2 certified cryptography provides an FIPS mode to use an embedded FIPS 140-2 certified OpenSSL cryptographic module.
Extreme Virtual Media Speeds	Virtual media supports twice the transmission speed of comparable models and supports connecting to DVD / CD drives, USB mass storage devices, hard drives and ISO images. Virtual media allows you to conduct file transfers, application and OS patches, and run diagnostics remotely.
Advanced FPGA Graphics Processor	Our enhanced FPS throughput provides a responsive and vivid video display, offering resolutions up to 1920 x 1200 @ 60 Hz with 24-bit color at the switch's external local console, and on remote session displays.
Panel Array Mode™	Exclusive ATEN feature allows simultaneous monitoring for both local console operators and remote access users.
Blade Server Support	Support for blade server associations with KVM switch ports – allows the blade server chassis and individual blades to be integrated into the sidebar tree view for easy access.
Dual IP	Dual IP operation provides the backup for complete redundancy and reliability. Should one of the Ethernet ports become unavailable, the other will take over in order to keep the system functioning normally.

Configurable Network Bandwidth Settings	Network bandwidth settings allow you to streamline data throughput by adjusting the size of the data stream (bandwidth) to match network traffic conditions.Video performance can be adjusted so that data throughput is optimized for the available network bandwidth. With high-speed LAN access,the settings can be adjusted so that a greater amount of video data is sent, resulting in a higher quality video display. In a limited bandwidth situation, the settings can be adjusted so that network lag is minimized.
Mouse DynaSync™	Automatically synchronizes the local and remote mouse movements for perfect alignment of mouse pointers, regardless of the mouse acceleration settings on the server.
Message Board	To alleviate the problem of access conflicts arising from multiple log ins, the message board functions similar to an Internet chat program, allowing users to instantly communicate with each other.
Adapter ID	The adapter ID function stores port information such as the adapter ID, OS, keyboard language, adapter name, operation modes and more. This enables administrators to relocate the servers to different ports without having to reconfigure the adapters or switches.

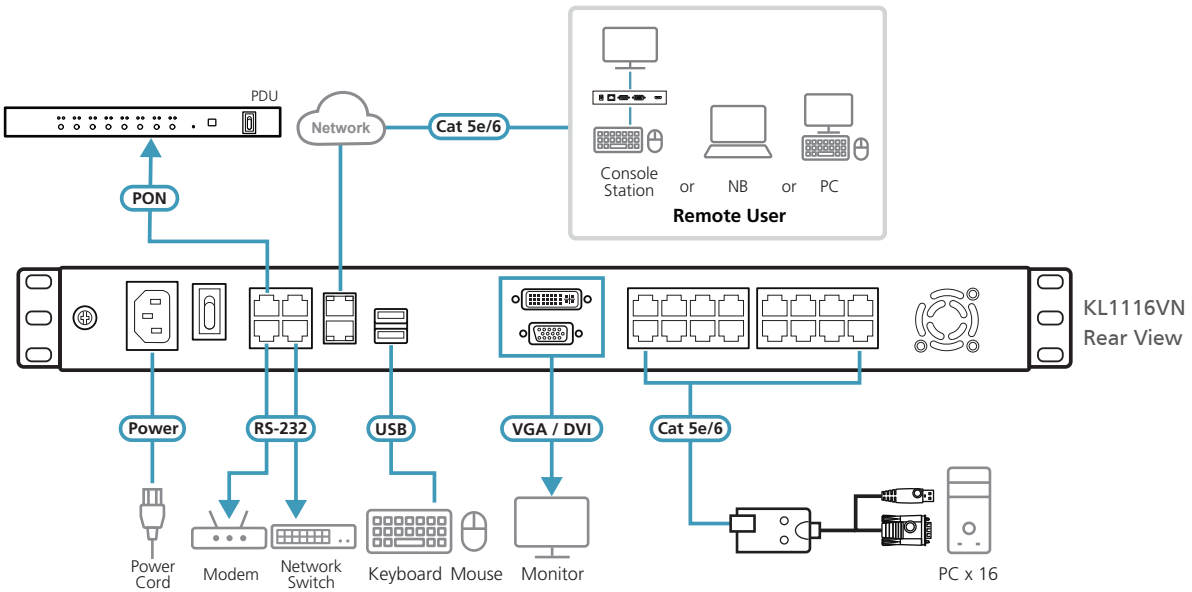

Optional

Rack Mount Kits

ATEN LCD KVM switches allow you to choose a range of optional rack mount kits to meet your needs, including the Single Person Easy Installation Rack Mount Kit, which streamlines the rack mounting process.

Normal rack mounting procedures call for at least two people to rack mount a KVM switch. The Single Person Easy Installation Rack Mount Kit enables one person to rack mount an LCD KVM switch. In just a matter of minutes, your new LCD KVM switch can go from the box to the rack.

For convenience and flexibility, there is one standard and three optional rack mounting kits available:

Standard Rack Mount Kit	Depth (cm)
Short (Standard)	42 – 77
2X-010G (Long / Optional)	68 – 105

Easy Installation Rack Mount Kit	Depth (cm)
2K-0005 (Short / Optional)	57 – 70
2K-0006 (Long / Optional)	68 – 105

KVM Adapter

The following KVM adapters are required for use with the KL1108VN / KL1116VN:

	PS/2 KVM Adapter	USB KVM Adapter	Sun Legacy KVM Adapter	Serial KVM Adapter	USB Virtual Media KVM Adapter	USB Virtual Media KVM Adapter with Audio	USB Virtual Media KVM Adapter with Smart Card Reader	DVI USB Virtual Media KVM Adapter with Smart Card Reader	HDMI USB Virtual Media KVM Adapter with Smart Card Reader	DisplayPort USB Virtual Media KVM Adapter with Smart Card Reader
	 KA7120	 KA7170	 KA7130	 KA7140	 KA7175	 KA7176	 KA7177	 KA7166	 KA7168	 KA7169
Type:	**PS/2**	**All USB Systems**	**Sun Legacy**	**Serial**	**Connects to USB 2.0 ports**	**Connects to USB 2.0 ports + Audio**	**Connects to USB 2.0 ports with Smart Card Reader support**	**Connects to USB 2.0 ports with Smart Card Reader support**	**Connects to USB 2.0 ports with Smart Card Reader support**	**Connects to USB 2.0 ports with Smart Card Reader support**
Interface:	6-pin Mini-DIN Male 6-pin Mini-DIN Male HDB-15 Male	USB Type A Male HDB-15 Male	13W3 Male DIN 8 pin Male	RS-232 DB-9 Female	USB Type A Male HDB-15 Male	USB Type A Male HDB-15 Male 2 Audio plugs	USB Type A Male USB Type A Male HDB-15 Male	USB Type A Male USB Type A Male DVI-D Male (Single Link)	USB Type A Male USB Type A Male HDMI Male	USB Type A Male USB Type A Male DisplayPort Male

Specifications

	KL1108VN	KL1116VN
Console Connections		
Local	1	
Remote	1	
Computer Connections		
Direct	8	16
Maximum	128 (via Cascade)	256 (via Cascade)
Port Selection	OSD, Hotkeys, Pushbuttons	
Connectors		
Console Ports	2 x USB Type-A Female (White) 1 x DVI-D Female (White) 1 x HDB-15 Female (Blue)	
External Mouse Port	1 x USB Type-A Female	
KVM Ports	8 x RJ-45 Female	16 x RJ-45 Female
Serial	2 x RJ-45 Female	
PON	1 x RJ-45 Female	
Modem	1 x RJ-45 Female	
LAN Ports	2 x RJ-45 Female	
Power	1 x IEC 60320 / C14	
Switches		
Port Selection	8 x Pushbutton	16 x Pushbutton
Reset	1 x Semi-recessed Pushbutton	
Power	1 x Rocker	
LCD Power	1 x Pushbutton	
LCD Adjustment	4 x Pushbutton	
LEDs		
Online	8 (Green)	16 (Green)
Selected	8 (Orange)	16 (Orange)
10/100/1000 Mbps	2 (Orange / Orange & Green / Green)	
Power	1 (Blue)	
LCD Power	1 (Orange)	
Lock	1 x Num Lock (Green) 1 x Caps Lock (Green) 1 x Scroll Lock (Green)	
Video		
Remote	1920 x 1200 @60Hz	
Panel Spec		
LCD Module	19"	
Resolution	1280 x 1024 @75Hz	
Pixel Pitch	0.294 mm x 0.294 mm	
Response time	5 ms	
Viewing Angle	170° (H), 160° (V)	
Contrast Ratio	1000 : 1	
Support Color	16.7M colors	
Luminance	250 cd/m^2	
Emulation		
Keyboard / Mouse	PS/2; USB	
Scan Interval	1 – 255 Sec.	
Maximum Input Power Rating	100 – 240 VAC; 50 – 60 Hz; 1A	
Power Consumption	AC110V:29W AC220V:29.4W	AC110V:32.1W AC220V:32.4W
Environmental		
Operating Temperature	0 – 40 °C	
Storage Temperature	-20 – 60 °C	
Humidity	0 – 80% RH, Non-condensing	
Physical Properties		
Housing	Metal	
Weight	15.22 kg	15.28 kg
Dimensions (L x W x H)	48.00 x 70.12 x 4.40 cm	

ATEN International Co., Ltd.
3F., No.125, Sec. 2, Datung Rd., Sijhih District., New Taipei City 221, Taiwan
Phone: 886-2-8692-6789 Fax: 886-2-8692-6767
www.aten.com E-mail: marketing@aten.com

Product information is subject to change without prior notice.

Released: 10/2026 V5.0

© Copyright 2026 ATEN® International Co. Ltd.
ATEN and the ATEN logo are registered trademarks of ATEN International Co., Ltd.
All rights reserved. All other trademarks are the property of their respective owners.