Slideaway™ LCD KVM Switch

CL5708 (CL5708M: 17" LCD; CL5708MW: 17.3" LCD; CL5708N: 19" LCD)

CL5716 (CL5716M: 17" LCD; CL5716MW: 17.3" LCD; CL5716N: 19" LCD)

The CL5708 / CL5716 Slideaway™ LCD KVM Switch series is a control unit that allows access to multiple computers from a single PS/2 or USB KVM (keyboard, video, and mouse) console. A single CL5708 or CL5716 can control up to 8 or 16 computers. As many as 31 additional KVM switches can be daisy-chained to the CL5708 / CL5716, so that up to 256 / 512 computers can all be controlled from a single KVM console.

The CL5708 / CL5716 offers a space-saving, streamlined approach to KVM switch technology by integrating a keyboard, 17", 17.3" or 19" LED-backlit LCD monitor, and touchpad in a 1U rack-mountable sliding housing.

The CL5708 / CL5716 is built on a modular design. The KVM section can be detached from the switch section for convenient maintenance and repair.

CL5716 Front View



CL5716 Rear View

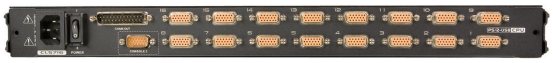

Features

- Exclusive LED illumination light – designed by ATEN to illuminate the keyboard and touchpad to allow visibility in low-light conditions
- Integrated KVM console with 17", 17.3"or 19" LED-backlit LCD monitor in a Slideaway™ housing
- Space saving technology – up to two consoles (one bus) control up to 8 or 16 computers
- Daisy-chain up to 31 additional units – controls up to 256 (CL5708) or 512 (CL5716) computers from a single console.
- Dual interface – supports computers and console with PS/2 or USB keyboards and mice
- USB port allows each computer to access USB peripherals* (inapplicable to CL5708MW / CL5716MW)
- LCD module rotates up to 120 degrees for a more comfortable viewing angle
- Multiplatform support – Windows, Linux, Mac, and Sun
- Supports multimedia USB keyboards for PC, Mac and Sun
- Auto PS/2 and USB interface detection
- Keyboard and mouse emulation (PS/2 and USB) for smooth switching and simultaneous booting of multiple computers even when the console focus is elsewhere

- Additional hot-pluggable USB mouse port on front panel (also functions as a USB peripheral port)
- Superior video quality – supports resolutions of up to 1280 x 1024 @ 75 Hz (CL5708M / CL5708N / CL5716M / CL5716N) and 1920 x 1080 @ 60 Hz (CL5708MW / CL5716MW)
- No software required – convenient computer selection via front panel pushbuttons, hotkeys and multilingual on-screen display (OSD) menus
- Auto-senses station's position on daisy-chained installations; no need for manual dip switch setting; front panel LED indicates station's position
- Port names automatically reconfigured when station sequence is changed
- Two level password security – only authorized users can view and control computers
- Supports one administrator and four user accounts with separate profiles
- Auto Scan mode enables continuous monitoring of user-selected computers
- Broadcast support – commands from the keyboard can be broadcast to all available computers on the installation
- Hot pluggable
- Beeper on / off via hotkey and OSD
- Firmware upgrades to all the chained KVM switches at the same time via the daisy-chain cable
- Optional rack mount kits available including easy installation options
- Supports the following keyboard languages: English (UK), English (US), French, German (Germany), German (Switzerland), Hungarian, Italian, Japanese, Korean, Russian, Spanish, Swedish, and Traditional Chinese

Note:
The USB peripheral function only works with USB cable set connections. It will not work with PS/2 cable set connections (inapplicable to CL5708MW / CL5716MW).

Highlights

USB port (A)	An additional USB port located under the LCD panel is available to connect peripheral devices (flash drive, CD-ROM drive, etc.) to the switch. USB peripherals can be used to install software, OS patches, or make system backups to computers connected to the installation from the CL5708 / CL5716 (inapplicable to CL5708MW / CL5716MW)
Extra USB mouse port (B)	For added convenience, a USB mouse port is provided for users who prefer to use an external mouse.
Flexibility	The LCD module rotates up to 120 degrees for a more comfortable viewing angle.
Multilanguage support	The CL5708 / CL5716 supports the following keyboard languages: English (UK), English (US), French, German (Germany), German (Switzerland), Hungarian, Italian, Japanese, Korean, Russian, Spanish, Swedish, and Traditional Chinese.
Broadcast mode	When this function is in effect, commands sent from the console are broadcast to all available computers on the installation.This function is particularly useful for operations that need to be performed on multiple computers, such as performing a system wide shutdown, installing or upgrading software, etc.

A  B 

Single Person Easy Installation Kit

Slideaway™ LCD KVM switches allow you to choose from a host of optional rack mount kits to meet your needs, including the Single Person Easy Installation Rack Mount Kit, which streamlines the rack mounting process.

Normal rack mounting procedures call for at least two people to rack mount a KVM switch. The Single Person Easy Installation Rack Mount Kit enables one person to rack mount a Slideaway™ LCD KVM switch. In just a matter of minutes, your new Slideaway™ LCD KVM switch can go from the box to the rack.

For convenience and flexibility, there is one standard, and three optional rack mounting kits available:



Rack Mount Kit	Depth (cm)	
2X-010G (Long / Optional)	17″	68 - 105
	17.3″ / 19″	70 - 105
Short (Standard)	17″	42 - 82
	17.3″ / 19″	52 - 85

Easy Installation Rack Mount Kit	Depth (cm)
2K-0006 (Long / Optional)	68 -105
2K-0005 (Short / Optional)	57 - 70

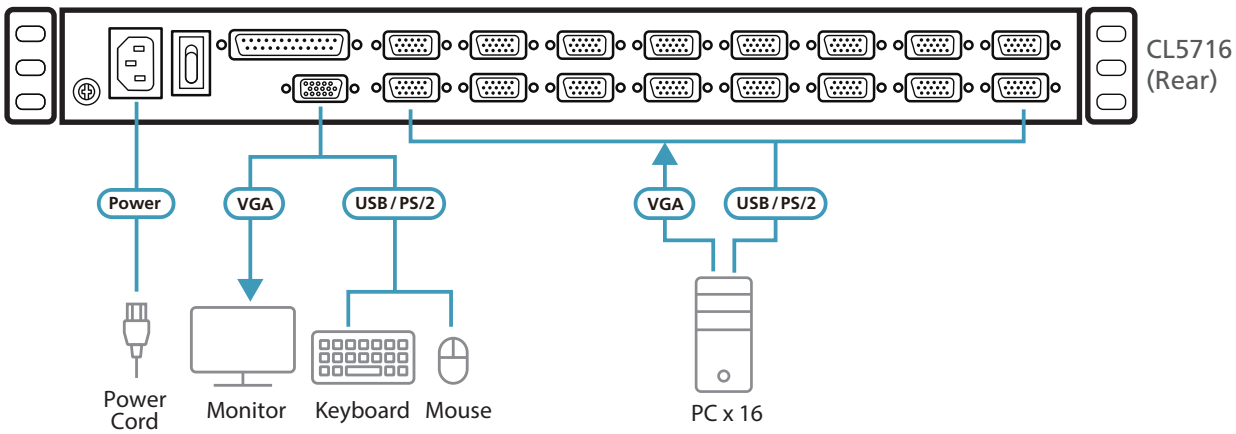

Specifications

	CL5708M	CL5708MW	CL5708N
Computer Connections			
Direct	8		
Maximum	256 (via Daisy-chain)		
Port Selection	OSD, Hotkey, Pushbutton		
Connectors			
KVM Ports	8 x SPHD Female (Yellow)		
Daisy Chain Ports	1 x DB-25 Male		
Firmware Upgrade	1 x RJ-11 Female		
Power	1 x IEC 60320/C14		
External Console Ports	1 x SPHD Male (Yellow)		
External Mouse Port	1 x USB Type-A Female (Front)		
USB Port	1 x USB Type-A Female	N/A	1 x USB Type-A Female
Switches			
Port Selection	2 x Pushbutton		
Station Selection	2 x Pushbutton		
Reset	1 x Semi-recessed Pushbutton		
Firmware Upgrade	1 x Slide Switch		
Power	1 x Rocker Switch		
LCD Control	4 x Pushbutton		
LCD Power	1 x LED Pushbutton		
LEDs			
Online	8 (Orange)		
Port ID	2 x 7-segment LED Display (Orange)		
Station ID	2 x 7-segment LED Display (Orange)		
Power	1 (Dark Green)		
Lock	1 x Num Lock (Green) 1 x Caps Lock (Green) 1 x Scroll Lock (Green)		
LED Illumination Light	1 x LED Illumination Light		
Panel Spec			
LCD Module	17" TFT-LCD	17.3" TFT-LCD	19" TFT-LCD
Resolution	1280 x 1024 @ 75 Hz	1920 x 1080 @ 60 Hz	1280 x 1024 @ 75 Hz
Response time	5 ms	16 ms	5 ms
Viewing Angle	170° (H), 160° (V)	170° (H), 170° (V)	170° (H), 160° (V)
Pixel Pitch	0.264 mm x 0.264 mm	0.1989 mm x 0.1989 mm	0.294 mm x 0.294 mm
Support Color	16.77M colors		
Contrast Ratio	1000:1	800:1	1000:1
Luminance	250 cd/m²		
Video			
Input Video Resolution	up to 1920 × 1200 @ 60 Hz; 1280 × 1024 @ 75 Hz, DDC2B	up to 1920 × 1200 @ 60 Hz (all resolution @ 60Hz only); 1920 × 1080 @ 60 Hz, DDC2B	up to 1920 × 1200 @ 60 Hz; 1280 × 1024 @ 75 Hz, DDC2B
Scan Interval	1-255 seconds		
Emulation			
Keyboard / Mouse	PS/2, USB		
Maximum Input Power Rating	100-240V AC, 50 / 60 Hz, 1A		
Power Consumption	AC110V: 23.9W AC220V: 25.1W	AC110V: 14.5W AC220V: 15.4W	AC110V: 26.1W AC220V: 27.2W
Environmental			
Operating Temperature	0 – 40 °C	0 – 40 °C	0 – 50 °C
Storage Temperature	-20 – 60 °C		
Humidity	0 – 85% RH, Non-condensing		
Physical Properties			
Housing	Metal + Plastic		
Rail Type	Single Rail		
Weight	13.47 kg	13.39 kg	13.39 kg
Dimensions (L x W x H)	48.00 x 64.27 x 4.40 cm	48.00 x 68.92 x 4.40 cm	48.00 x 68.92 x 4.40 cm

Specifications

	CL5716M	CL5716MW	CL5716N
Computer Connections			
Direct	16		
Maximum	512 (via Daisy-chain)		
Port Selection	OSD, Hotkey, Pushbutton		
Connectors			
KVM Ports	16 x SPHD Female (Yellow)		
Daisy Chain Ports	1 x DB-25 Male		
Firmware Upgrade	1 x RJ-11 Female		
Power	1 x IEC 60320/C14		
External Console Ports	1 x SPHD Male (Yellow)		
External Mouse Port	1 x USB Type-A Female (Front)		
USB Port	1 x USB Type-A Female	N/A	1 x USB Type-A Female
Switches			
Port Selection	2 x Pushbutton		
Station Selection	2 x Pushbutton		
Reset	1 x Semi-recessed Pushbutton		
Firmware Upgrade	1 x Slide Switch		
Power	1 x Rocker Switch		
LCD Control	4 x Pushbutton		
LCD Power	1 x LED Pushbutton		
LEDs			
Online	16 (Orange)		
Port ID	2 x 7-segment LED Display (Orange)		
Station ID	2 x 7-segment LED Display (Orange)		
Power	1 (Dark Green)		
Lock	1 x Num Lock (Green) 1 x Caps Lock (Green) 1 x Scroll Lock (Green)		
LED Illumination Light	1 x LED Illumination Light		
Panel Spec			
LCD Module	17" TFT-LCD	17.3" TFT-LCD	19" TFT-LCD
Resolution	1280 x 1024 @ 75 Hz	1920 x 1080 @ 60 Hz	1280 x 1024 @ 75 Hz
Response time	5 ms	16 ms	5 ms
Viewing Angle	170° (H), 160° (V)	170° (H), 170° (V)	170° (H), 160° (V)
Pixel Pitch	0.264 mm x 0.264 mm	0.1989 mm x 0.1989 mm	0.294 mm x 0.294 mm
Support Color	16.77M colors		
Contrast Ratio	1000:1	800:1	1000:1
Luminance	250 cd/m²		
Video			
Input Video Resolution	up to 1920 × 1200 @ 60 Hz; 1280 × 1024 @ 75 Hz, DDC2B	up to 1920 × 1200 @ 60 Hz (all resolution @ 60Hz only); 1920 × 1080 @ 60 Hz, DDC2B	up to 1920 × 1200 @ 60 Hz; 1280 × 1024 @ 75 Hz, DDC2B
Scan Interval	1-255 seconds		
Emulation			
Keyboard / Mouse	PS/2, USB		
Maximum Input Power Rating	100-240V AC, 50 / 60 Hz, 1A		
Power Consumption	AC110V: 24.7W AC220V: 25.8W	AC110V: 14.8W AC220V: 15.6W	AC110V: 26.9W AC220V: 27.9W
Environmental			
Operating Temperature	0 – 40 °C	0 – 40 °C	0 – 50 °C
Storage Temperature	-20 – 60 °C		
Humidity	0 – 85% RH, Non-condensing		
Physical Properties			
Housing	Metal + Plastic		
Rail Type	Single Rail		
Weight	13.59 kg	13.65 kg	13.65 kg
Dimensions (L x W x H)	48.00 x 64.27 x 4.40 cm	48.00 x 68.92 x 4.40 cm	48.00 x 68.92 x 4.40 cm

ATEN International Co., Ltd.
3 F., No. 125, Sec. 2, Datong Rd., Xizhi Dist., New Taipei City 221, Taiwan
Phone: 886-2-8692-6789 Fax: 886-2-8692-6767
www.aten.com E-mail: marketing@aten.com

Product information is subject to change without prior notice.

Released: 11/2026 V20.0

© Copyright 2026 ATEN® International Co. Ltd.
ATEN and the ATEN logo are registered trademarks of ATEN International Co., Ltd.
All rights reserved. All other trademarks are the property of their respective owners.