Simply Better Connections

KL1508Ai / KL1516Ai

8 / 16-Port Dual Rail LCD KVM over IP Switch User Manual

Compliance Statements

FEDERAL COMMUNICATIONS COMMISSION INTERFERENCE STATEMENT

This equipment has been tested and found to comply with the limits for a Class A digital device, pursuant to Part 15 of the FCC Rules. These limits are designed to provide reasonable protection against harmful interference when the equipment is operated in a commercial environment. This equipment generates, uses, and can radiate radio frequency energy and, if not installed and used in accordance with the instruction manual, may cause harmful interference to radio communications. Operation of this equipment in a residential area is likely to cause harmful interference in which case the user will be required to correct the interference at his own expense.

The device complies with Part 15 of the FCC Rules. Operation is subject to the following two conditions: (1) this device may not cause harmful interference, and (2) this device must accept any interference received, including interference that may cause undesired operation.

FCC Caution

Any changes or modifications not expressly approved by the party responsible for compliance could void the user's authority to operate this equipment.

Warning

Operation of this equipment in a residential environment could cause radio interference.

Suggestion

Shielded twisted pair (STP) cables must be used with the unit to ensure compliance with FCC & CE standards.

Achtung

Der Gebrauch dieses Geräts in Wohnumgebung kann Funkstörungen verursachen.

KCC Statement

유선 제품용 / A 급 기기 (업무용 방송 통신 기기)
이 기기는 업무용 (A 급) 전자파적합기기로서 판매자 또는 사용자는 이 점을 주의하시기 바라며 , 가정 외의 지역에서 사용하는 것을 목적으로 합니다 .

Industry Canada Statement
This Class A digital apparatus complies with Canadian ICES-003.

CAN ICES-003 (A) / NMB-003 (A)

RoHS
This product is RoHS compliant.

User Information

Online Registration

Be sure to register your product at our online support center:

International	http://support.aten.com
North America	http://www.aten-usa.com/product_registration

Telephone Support

For telephone support, call this number:

International	886-2-8692-6959
China	86-400-810-0-810
Japan	81-3-5615-5811
Korea	82-2-467-6789
North America	1-888-999-ATEN ext 4988 1-949-428-1111

User Notice

All information, documentation, and specifications contained in this manual are subject to change without prior notification by the manufacturer. The manufacturer makes no representations or warranties, either expressed or implied, with respect to the contents hereof and specifically disclaims any warranties as to merchantability or fitness for any particular purpose. Any of the manufacturer's software described in this manual is sold or licensed `as is'. Should the programs prove defective following their purchase, the buyer (and not the manufacturer, its distributor, or its dealer), assumes the entire cost of all necessary servicing, repair and any incidental or consequential damages resulting from any defect in the software.

The manufacturer of this system is not responsible for any radio and/or TV interference caused by unauthorized modifications to this device. It is the responsibility of the user to correct such interference.

The manufacturer is not responsible for any damage incurred in the operation of this system if the correct operational voltage setting was not selected prior to operation. PLEASE VERIFY THAT THE VOLTAGE SETTING IS CORRECT BEFORE USE.

A typical LCD (Liquid Crystal Display) monitor has millions of pixels. A dead pixel refers to a pixel with a defect in its ability to display the correct color output. It most often looks like a tiny black or white spot on your screen, although it can be any other color. Since even a tiny dust particle on one of the pixels during the manufacturing process or a slight bump during shipping can create a dead pixel, the ISO 13406-2 norm defines 4 classes of acceptable screens with dead pixels--Class 1 is the best; Class 4 is the worst. Almost all manufacturers use Class 2 to establish their warranties, which allows a certain amount of dead pixels to exist before they will replace the screen. Since the manufacturers consider these screens to be acceptable under ISO specifications, we cannot be responsible for replacement or warranty of the TFT LCD panel.

Product Information

For information about all ATEN products and how they can help you connect without limits, visit ATEN on the Web or contact an ATEN Authorized Reseller. Visit ATEN on the Web for a list of locations and telephone numbers:

International	http://www.aten.com
North America	http://www.aten-usa.com

Package Contents

Check to make sure that all the components are in working order. If you encounter any problem, please contact your dealer.

The KL1508Ai / KL1516Ai's standard package consists of:

1 KL1508Ai or KL1516Ai Dual Rail LCD KVM over IP Switch

1 power cord

1 standard rack mount kit

1 firmware upgrade cable

1 extension kit

1 user instructions

Optional Equipment

Depending on any optional equipment that you may have purchased, one of the following may be included in your package:

- Standard Installation Rack Mount Kit - Long
- Easy Installation Rack Mount Kit - Short
- Easy Installation Rack Mount Kit - Long

Contents

Compliance Statements ii
User Information iv
Online Registration iv
Telephone Support iv
User Notice v
Product Information. v
Package Contents vi
Optional Equipment. vi
Contents vii
About This Manual xiv
Conventions xvi

*Chapter 1.*Introduction
Overview 1
Features 4
Hardware 4
Management 4
Easy-to-Use Interface 5
Advanced Security 5
Virtual Remote Desktop 6
Requirements 7
General 7
External Console 7
Computers. 7
KVM Adapter Cables 8
Adapter Cable Resolutions 8
Operating Systems 9
Components 10
Front View 10
Keyboard Module 11
LCD Module 12
Rear View 13

*Chapter 2.*Hardware Setup
Before You Begin 15
Standard Rack Mount 16
Front-L Brackets Mounting 17
Single-Stage Installation 18
Daisy Chaining 22

*Chapter 3.*Basic Operation
Opening the Console 25
Opening Separately 25
Opening Together 27
Operating Precautions 28

Closing the Console 29
Touchpad Operation 30
LCD OSD Configuration 31
The LCD Buttons 31
The Adjustment Settings 32
Port Selection 33
Manual 33
OSD / GUI 33
Hotkeys 33
Hot Plugging 34
Hot Plugging Stations 34
Hot Plugging KVM Ports 34
Hot Plugging Console Ports 34
Powering Off and Restarting 35
Port ID Numbering 35

Chapter 4. OSD Operation

OSD Overview 37
OSD Login 37
OSD Hotkey 37
OSD Main Screen 38
Manufacturing Number 38
OSD Navigation 39
OSD Main Screen Headings 39
OSD Functions 40
F1: GOTO 40
F2: LIST 40
F3: SET 41
F4: ADM 44
F5: SKP 46
F6: BRC 47
F7: SCAN 47
F8: LOUT 48

Chapter 5. Hotkey Operation

Hotkey Port Control 49
Invoking Hotkey Mode 50
Number Lock and Minus Keys 50
Control and F12 Keys 50
Hotkey Mode Environment 50
Exiting Hotkey Mode 50
Selecting the Active Port 51
Auto Scan Mode Switching 52
Setting the Scan Interval 52
Entering Auto Scan 52
Exiting Auto Scan 53
Skip Mode Switching 54

Entering Skip Mode 54
Exiting Skip Mode 54
Computer Keyboard / Mouse Reset 55
Setting the Hotkey Beeper ON/OFF 55
Setting the Hotkey key combination 56
Setting the OSD Hotkey combination 56
Setting the Port Operating System 57
Restore the Default Values 57
Hotkey Summary Table 58

Chapter 6. **Keyboard Emulation**

Mac Keyboard 59
Sun Keyboard 60

Chapter 7. **Logging In**

Overview 61
Local Login 61
Browser Login 62
Windows Client AP Login 63
The Windows Client AP Connection Screen 64
Connecting – Windows Client AP 65
Java Client AP Login 66
The Java Client AP Connection Screen 67
Connecting – Java Client AP 68

Chapter 8. **The User Interface**

Overview 69
The Web Browser Main Page 69
Page Components 70
The Tab Bar 71
The AP GUI Main Page 72
The Control Panel 73
WinClient Control Panel 73
WinClient Control Panel Functions 75
Macros 77
Hotkeys 77
User Macros 79
System Macros 83
Video Settings 86
Gamma Adjustment 88
The Message Board 89
Button Bar 89
Message Display Panel 90
Compose Panel 90
User List Panel 90
Zoom 91
The On-Screen Keyboard 92

Changing Languages 92
Expanded Keyboard 93
Mouse Pointer Type 94
Mouse DynaSync Mode 95
Automatic Mouse Synchronization (DynaSync) 95
Mac and Linux Considerations 96
Manual Mouse Synchronization 96
Control Panel Configuration 97
The Java Control Panel 99

Chapter 9. **Port Access**

Overview 101
Browser GUI 101
AP GUI 101
The Sidebar 103
The Sidebar Tree Structure. 103
View Filter 104
Connections 105
Device Level 105
Port Level 106
User Preferences 107
Sessions 109
Access Rights 110
Browser GUI Interface. 110
AP GUI Interface 111
Saving Changes 111

Chapter 10. **User Management**

Overview 113
Browser GUI 113
AP GUI 113
Users 114
Adding Users 114
Modifying User Accounts 117
Deleting User Accounts. 117
Device Assignment 118
Assigning Device Permissions From the User’s Notebook 118

Chapter 11. **Device Management**

KVM Devices 121
Device Information 121
General 122
Device Setting 122
Network 123
IP Installer 124
Service Ports 124
Network Configuration 125

ANMS 127
Event Destination 127
Authentication and Authorization 128
CC Management Settings 131
Security 132
Login Failures 132
Login String 133
Security 134
Encryption 137
Working Mode 137
Private Certificate 138
Port Configuration 139
Date/Time 141
Time Zone 141
Date 141
Time 142
Network Time. 142
Set Quick View Ports 143

Chapter 12. **Log**

Overview 145
Browser GUI 145
AP GUI 145
Log Information 146

Chapter 13. **Maintenance**

Overview 147
Browser GUI 147
AP GUI 148
Device Firmware Upgrade (IP Card) 149
Adapter Firmware Upgrade (Mainboard and KVM Adapter Cables) . . . 150
Mainboard Firmware Upgrade. 150
KVM Adapter Cables Firmware Upgrade 151
Firmware Upgrade Recovery 153
Device Firmware (IP Card) 153
Adapter Firmware (Mainboard and KVM Adapter Cables) 153
Backup/Restore 154
Backup 154
System Operation 155
Clear Port Names: 155
Reset to Default: 155
System Reset: 155

Chapter 14. **The Firmware Upgrade Utility**

Introduction 157
Before You Begin 157
Performing the Upgrade 159

Starting the Upgrade 159
Upgrade Succeeded 162
Upgrade Failed 163
Firmware Upgrade Recovery 163
Main Board Firmware Upgrade Recovery 163
Adapter Cable Firmware Upgrade Recovery 164

Chapter 15. **Download**
Overview 165

Chapter 16. **Port Operation**
Overview 167
Connecting to a Port 168
The Port Toolbar 169
The Toolbar Icons 170
Toolbar Hotkey Port Switching 171
Auto Scanning 171
Skip Mode 172
Recalling the Port Access Page 173
Hotkey Summary Table 173
Panel Array Mode 174
Panel Array Toolbar 175
Multiuser Operation 176

Chapter 17. **The Log Server**
Installation 177
Starting Up 178
The Menu Bar 179
Configure 179
Events 180
Search 180
Maintenance 181
Options 182
Help 182
The Log Server Main Screen 183
Overview 183
The List Panel 184
The Event Panel 184

Appendix
Safety Instructions 185
General 185
Rack Mounting 187
Technical Support 188
International 188
North America 188
Specifications 189

IP Address Determination 192
The Local Console 192
IP Installer 192
Browser 193
IPv6 194
Link Local IPv6 Address 194
IPv6 Stateless Autoconfiguration 195
Trusted Certificates 196
Overview 196
Installing the Certificate 197
Certificate Trusted 198
Self-Signed Private Certificates 199
Examples 199
Importing the Files 199
Troubleshooting 200
Administration 200
General Operation 200
The Windows Client 202
The Java Client 202
The Log Server 203
Panel Array Mode 203
Sun Systems 204
Screen Resolutions Higher than 1280 x 1024 205
Additional Mouse Synchronization Procedures 207
Windows: 207
Sun / Linux: 208
Connection Tables 209
KL1508Ai 209
KL1516Ai 209
Supported Devices 210
Administrator Login Failure 211
Optional Rack Mounting 212
Dedicated Invocation Keys 215
OSD Factory Default Settings 216
ATEN Warranty Policy 217

About This Manual

This manual is provided to help you get the most out of your LCD KVM over IP switch. It covers all aspects of the device, including installation, configuration, and operation.

The LCD KVM over IP switch models covered in this manual include:

Model	Product Name
KL1508Ai	1-Local / Remote Share Access 8-Port Multi-Interface Cat 5 Dual Rail LCD KVM over IP Switch
KL1516Ai	1-Local / Remote Share Access 16-Port Multi-Interface Cat 5 Dual Rail LCD KVM over IP Switch

An overview of the information found in the manual is provided below.

Chapter 1, Introduction, introduces you to the KL1508Ai / KL1516Ai, its purpose, features, and benefits are presented, with its front and back panel components described.

Chapter 2, Hardware Setup, provides step-by-step instructions for setting up your LCD KVM over IP switch, and explains some of its basic operating procedures.

Chapter 3, Basic Operation, explains the fundamental concepts involved in operating the KL1508Ai / KL1516Ai.

Chapter 4, OSD Operation, provides a complete description of the KL1508Ai / KL1516Ai's OSD (On Screen Display), and the various functions contained.

Chapter 5, Hotkey Operation, details all of the concepts and procedures involved in the hotkey operation of your KL1508Ai / KL1516Ai installation.

Chapter 6, Keyboard Emulation, provides tables that list the PC to Mac and PC to Sun keyboard emulation mappings.

Chapter 7, Logging In, describes how to log into the KL1508Ai / KL1516Ai via its Graphical User Interface (GUI) using different access methods: from the local console, via an Internet browser, and a standalone Windows and Java application.

Chapter 8, The User Interface, describes the layout and components of the KL1508Ai / KL1516Ai’s user interface.

Chapter 9, Port Access, describes the Port Access page and how to to configure the various options provided or port management.

Chapter 10, User Management, shows administrators how to create, modify, and delete users, as well as assign access privileges.

Chapter 11, Device Management, shows administrators how to configure and control the overall KL1508Ai / KL1516Ai operations.

Chapter 12, Log, explains how to view, clear, and export event log information of the LCD KVM over IP switch using the log file utility.

Chapter 13, Maintenance, explains how to upgrade the KL1508Ai / KL1516Ai's firmware, as well as the firmware of the KVM Adapter Cables used to connect its ports to the installed devices.

Chapter 14, The Firmware Upgrade Utility, explains how to upgrade the KL1508Ai / KL1516Ai's firmware to the latest available version.

Chapter 15, Download, describes how to download standalone AP versions of the Win Client, the Java Client, the Log Server, and Power Over the Net (PoN) programs.

Chapter 16, Port Operation, provides detailed information on accessing and operating the devices connected to the KL1508Ai / KL1516Ai's ports.

Chapter 17, The Log Server, explains how to install and configure the Log Server.

Appendix provides the technical and troubleshooting information at the end of the manual.

Note:

- Read this manual thoroughly and follow the installation and operation procedures carefully to prevent any damage to the unit or connected devices.
- The product may be updated, with features and functions added, improved or removed since the release of this manual. For an up-to-date user manual, visit http://www.aten.com/global/en/

Conventions

This manual uses the following conventions:

`Monospaced`	Indicates text that you should key in.
[ ]	Indicates keys you should press. For example, [Enter] means to press the **Enter** key. If keys need to be chorded, they appear together in the same bracket with a plus sign between them: [Ctrl+Alt].
1.	Numbered lists represent procedures with sequential steps.
♦	Bullet lists provide information, but do not involve sequential steps.
>	Indicates selecting consecutive options (such as on a menu or dialog box). For example, Start > Run means to open the *Start* menu, and then select *Run*.
⚠	Indicates critical information.

Chapter 1
Introduction

Overview

The KL1508Ai and KL1516Ai Dual Rail LCD KVM Switches are control units that allow secure access to multiple computers from a single KVM (keyboard, video, and mouse) console. A single KL1508Ai or KL1516Ai can control up to 8 or 16 computers, respectively. They consist of an integrated LED-backlit LCD monitor, keyboard, and touchpad in a 1U rack-mountable retractable sliding housing.

The similarities and differences among the models in the KL1508Ai / KL1516Ai series are shown in the following table:

Model	LCD Panel	Ports
KL1508AiM	17"	8
KL1508AiN	19"	8
KL1516AiM	17"	16
KL1516AiN	19"	16

The LCD and keyboard/touchpad modules slide independently of each other. To maximize space in your data center, the keyboard/touchpad module slides back to "hide away" when not in use, while the thin profile LCD monitor rotates back — flush against the rack — allowing convenient monitoring of computer activity.

The KL1508Ai / KL1516Ai features IP-based connectivity that allows one local operator and multiple remote operators to concurrently monitor and access the computers on your installation. Because it uses TCP/IP for its communication protocol, the KL1508Ai / KL1516Ai can be accessed from anywhere via the LAN, WAN, or Internet — whether from down the hall, down the street, or halfway around the world.

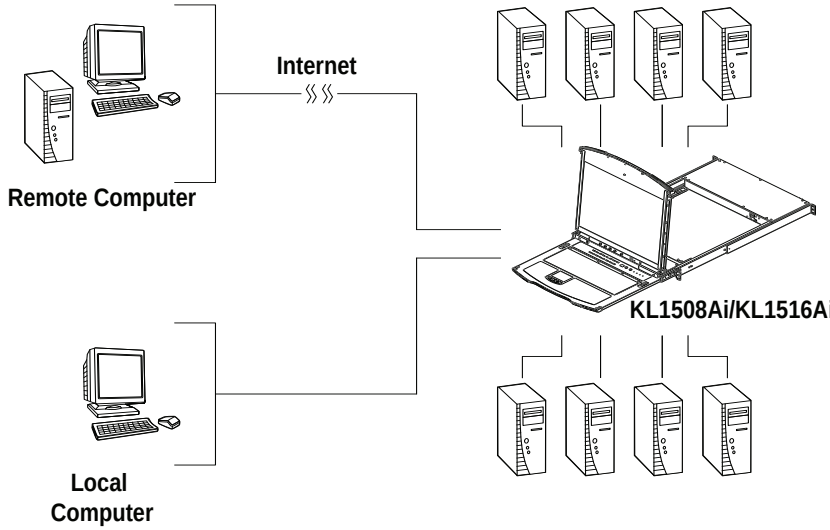

By daisy chaining up to 15 additional switches, as many as 256 computers can be controlled from the original KVM console. An auto-sensing function recognizes the position of each station on the chain, eliminating the need to manually set the position, and a two digit seven-segment LED display on the keyboard module showing each station's position for easy identification.

Compact, high-density, RJ-45 connectors and CAT 5e/6 cable make for a compact, efficient, wiring configuration, while the use of PS/2 and USB *KVM Adapter Cables* to link to the computers, permits any combination of PCs, Macs, Sun computers, and serial devices to coexist on the installation.

For added convenience, ports for an external keyboard, monitor, and mouse are provided on the rear panel — permitting you to manage the switch from a local console. There is also an external USB mouse port on the keyboard module, allowing you to use an external mouse, rather than the touchpad.

Access to any computer connected to the installation from the local console is easily accomplished by means of a powerful mouse driven graphical OSD (On Screen Display) menu system. A convenient *Auto Scan* feature also permits automatic scanning and monitoring of the activities of all computers running on the installation one by one.

Remote operators connect to the KL1508Ai / KL1516Ai via its IP address from anywhere on the LAN, WAN, or Internet via their browsers. Once they successfully log in, they can take control using either the *Windows Client* or *Java Client* utility. Inclusion of a Java-based client ensures that the KL1508Ai

/ KL1516Ai is platform independent, and is able to work with most operating systems.

System administrators can handle a multitude of maintenance tasks smoothly and efficiently — from installing and running GUI applications, to BIOS level troubleshooting, routine monitoring, concurrent maintenance, system administration, rebooting and even pre-booting functions — all from a remote connection.

Remote operators can exchange keyboard, video and mouse signals with the computers attached to the KL1508Ai / KL1516Ai just as if they were present locally and working on the equipment directly.

Enhanced features include a *Panel Array Mode* that displays the video output of up to 8 (KL1508Ai) or 16 (KL1516Ai) computers at the same time, and a *Message Board* that allows logged in users to conveniently and instantly communicate with one other — no matter where in the world they actually are.

Setup is fast and easy — plugging cables into their appropriate ports is all that is entailed. Because the KL1508Ai / KL1516Ai intercepts keyboard input directly, there is no need to get involved in complex installation routines or to be concerned with incompatibility problems.

Since the KL1508Ai / KL1516Ai's firmware is upgradable over the Internet, you can stay current with the latest functionality improvements simply by downloading firmware updates from our website as they become available.

With its advanced security features, the KL1508Ai / KL1516Ai is the fastest, most reliable, most cost effective way to remotely access and manage widely distributed multiple computer installations.

Features

Hardware

- Integrated KVM console with 17” or 19” LED-backlit LCD monitor in a Dual Rail housing
- Exclusive LED illumination light — designed by ATEN to illuminate the keyboard and touchpad to allow visibility in low-light conditions
- A single console controls up to 8 (KL1508Ai) or 16 (KL1516Ai) computers
- Daisy chain up to 15 additional KVM switches to control up to 256 computers*
- One bus for remote KVM over IP access
- Space-saving RJ-45 connectors and Cat 5e/6 cabling
- KVM adapter cables designed with automatic conversion to allow flexible interface combinations (PS/2, USB, Sun and serial) to control all computer types
- Extra console port — manage computers in the LCD KVM switch from an external console (monitor, USB or PS/2 keyboard, and USB or PS/2 mouse)
- Multiplatform support: PC, Mac, Sun and Serial
- Supports external USB mouse
- Dual Rail housing is slightly less than 1U with top and bottom clearance for smooth operation in 1U of rack space
- Dual Rail — LCD monitor slides independently of the keyboard/touchpad
- LCD module rotates up to 120 degrees for a more comfortable viewing angle
- Console lock — enables the console drawer to remain securely locked away in position when not in use
- LCD power button helps save energy and prolong displays’ life

*Compatible KVM switches: KH1508A/KH1516A, KH0116, ACS1208A/ACS1216A, CS1708A/CS1716A, KH1508/KH1516

Management

- Up to 64 user accounts — up to 32 concurrent remote logins
- End session feature — administrators can terminate any running session

- Adapter ID — stores port information allowing administrators to relocate servers to different ports, without having to reconfigure the adapters and switch
- Port Share Mode allows multiple users to gain access to a server simultaneously
- Remote power control for attached Power Over the NET™ devices
- Integration with ALTUSEN CC2000 Management software
- Event logging and Windows-based Log Server support
- Local Log Event
- Firmware upgradeable
- IPv6 capable

Easy-to-Use Interface

- Easy computer selection via pushbuttons, Hotkey Mode, OSD (On-Screen Display), and Browser-based GUI
- Local Console, Browser, and AP GUIs offer a unified multi language interface to minimize user training time and increase productivity
- Multiplatform client support (Windows, Mac OS X, Linux, Sun)
- Multi-browser support: Internet Explorer, Chrome, Firefox, Safari, Opera, Netscape
- Browser-based UI in pure Web technology allows administrators to perform administrative tasks without the need for Java to be pre-installed
- Panel Array Mode™
- Keyboard broadcast* — keyboard input can be duplicated on all the attached servers
- Multiple keyboard languages — English (UK), English (US), French, German (Germany), German (Switzerland), Greek, Hungarian, Italian, Japanese, Korean, Russian, Spanish, Swedish, Traditional Chinese, and Turkish

*Local Console only

Advanced Security

- Remote authentication support: RADIUS, LDAP, LDAPS, and MS Active Directory

- Supports TLS 1.2 encryption and RSA 1024-bit certificates to secure user logins from browsers
- Flexible encryption design allows users to choose any combination of 56-bit DES, 168-bit 3DES 256-bit AES, 128-bit RC4, or Random for independent KB/Mouse, and video data encryption
- IP/MAC Filter support for enhanced security protection
- Configurable user and group permissions for server access and control

Virtual Remote Desktop

- Video quality and video tolerance can be adjusted to optimize data transfer speed; monochrome color depth setting, threshold and noise settings for compression of the data bandwidth in low bandwidth situations
- Full-screen or sizable and scalable Virtual Remote Desktop
- Message board feature allows logged in users to communicate with each other
- Mouse DynaSync™ — automatically synchronizes the local and remote mouse movements
- On-screen keyboard with multi language support
- BIOS-level access

Requirements

General

- We recommend computers with at least a P 4 2GHz processor, and 1 GB RAM.
- Browsers must support TLS 1.2 encryption.
- A network transfer speed of at least 512kbps is recommended.
- For the *Log Server*, you must have the Microsoft Jet OLEDB 4.0 or higher driver installed.

External Console

- A VGA, SVGA, or Multisync monitor capable of the highest resolution that you will be using on any computer in the installation.
- A USB or PS/2 style mouse
- A USB or PS/2 style keyboard

Computers

The following equipment must be installed on the computers that connect to the KL1508Ai or KL1516Ai's KVM ports:

- A VGA, SVGA or Multisync port
- A USB Type-A port and USB host controller (for USB KVM Adapter Cable Connection, see below)
- 6-pin mini-DIN keyboard and mouse ports (for PS/2 KVM Adapter Cable Connection, see below)

Note: The integrated LCD monitor's maximum screen resolution is 1280 x 1024 @ 75 Hz. If you want to use a higher setting for the screen resolutions of the attached computers, see *Screen Resolutions Higher than 1280 x 1024*, page 205.

KVM Adapter Cables

- Cat 5e/6 cable is required to connect the KL1508Ai / KL1516Ai to one of the KVM adapter cables.
- The following KVM adapter cables are required for use with the KL1508Ai / KL1516Ai:

Function	Module
Connect to devices with PS/2 ports	KA7920 / KA7520 / KA7120 KA9520 / KA9120
Connect to devices with USB ports	KA7970 / KA7570 / KA7166 / KA7168 / KA7169 / KA7170 KA9570 / KA9170
Connect to Sun Legacy systems (with 13W3 port)	KA9130 / KA7130
Connect to Sun USB systems	KA9170 / KA7170
Connect to serial based devices	KA9140

Note: 1. KVM adapter cables are referred to as *I/O Modules* in some dialog boxes.

2. The following cable models support the Adapter Cable ID function: KA7920 / KA7970 / KA7520 / KA7570 / KA7120 / KA7130 / KA7166 / KA7168 / KA7169 / KA7170.

Adapter Cable Resolutions

The table below provides the maximum resolutions available for each KVM adapter cable.

Model No.		Computer Ports	Video Resolution
KA71xx	KA7120	2 x PS/2, 1 x HDB-15	1920 x 1200
	KA7130	1 x Min Din 8 Male	
	KA7166	2 x USB Type A, 1 x DVI-D	
	KA7168	2 x USB Type A, 1 x HDMI	
	KA7169	2 x USB Type A, 1 x DisplayPort	
	KA7170	1 x USB Type A, 1 x HDB-15	
KA75xx	KA7520	2 x PS/2, 1 x HDB-15	
	KA7570	1 x USB, 1 x HDB-15	
KA79xx	KA7920	2 x PS/2, 1 x HDB-15	1600 x 1200
	KA7970	1 x USB, 1 x HDB-15	
KA91xx	KA9140	N/A	1024 x 768

Operating Systems

Supported operating systems are shown in the table, below:

OS		Version
Windows		NT[1], Server 2003, Server 2008, 2000 or later
Linux[2]	RedHat	9.0, Fedora, RHEL AS 4, RHEL 5 or later
	SuSE	10, OpenSUSE 10.2; SLES 10 SP1 or later
	Debian	3.1, 4.0 or later
	Ubuntu	7.04, 7.10 or later
UNIX	IBM	AIX4.3, 5L (V5.2,V5.3), V6 (V6.1) or later
	FreeBSD	5.5, 6.1, 6.2 or later
Novell	Netware	5.0 or later
Sun		Solaris 8, 9, 10 or later
Mac		9.0, 9.1, 10.1, 10.2, 10.3, 10.4, 10.5 or later
DOS		6.2 or later[1]

Note: 1. Does not support USB.

2. Kernels below 2.6 do not support USB 2.0.

Components

Front View

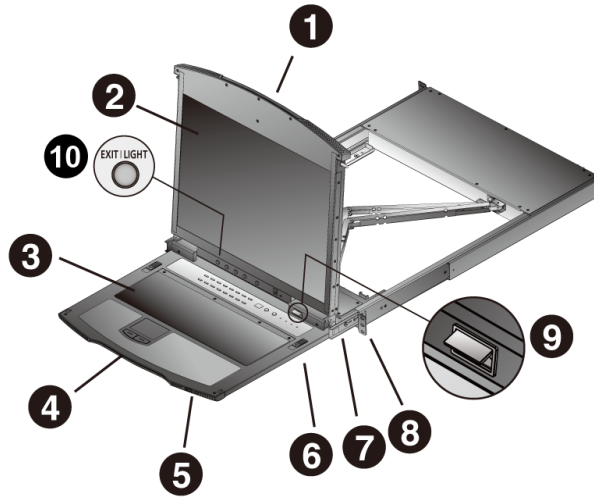

No.	Component	Description
1	upper handle	Pull to slide the LCD module out; push to slide the module in. See *Opening the Console*, page 25, for details on sliding the console in and out.
2	LCD module	See *LCD Module*, page 12.
3	keyboard module	See *Keyboard Module*, page 11.
4	lower handle	Pull to slide the keyboard module out. See *Opening the Console*, page 25, for more details on sliding the console in and out.
5	power LED	Lights (blue) to indicate that the unit is receiving power.
6	keyboard release catch	These catches (one on each side) release the keyboard module so you can slide it away.
7	LCD release catch	These catches (one on each side) release the LCD module so you can slide it away.
8	rack mount tabs	The rack mount tabs located at each corner of the unit secure the chassis to a system rack. See *Standard Rack Mount*, page 16, for details.
9	LED illumination light	Illuminates the keyboard and touchpad to allow visibility in low-light conditions.
10	exit / light pushbutton	Press the exit / light pushbutton for two seconds to turn the LED illumination light on or off. (Default: on)

Keyboard Module

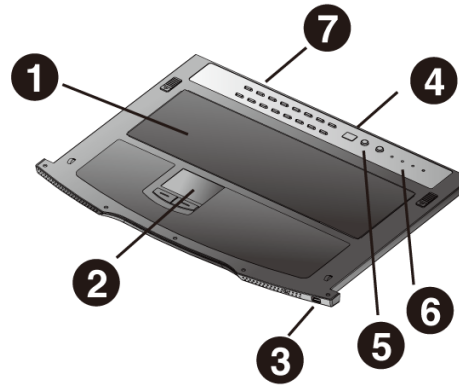

No.	Component	Description
1	keyboard	Standard 105-key keyboard
2	touchpad	Standard mouse touchpad
3	external mouse port	This USB Type-A mouse port is provided for users who prefer to use an external mouse.
4	station ID LED	In a daisy chained installation, the station ID of the currently selected station displays as a 2-digit figure in this panel.See *Port ID Numbering*, page 35 for further details.
5	station selection area	◆ The LED displays the station number that the port with the KVM focus is located on. ◆ The left button shifts the KVM focus down the chain (station 2 → station 1, etc.). After station 1, it cycles back to the last station. The right button shifts the KVM focus up the chain. After the last station, it cycles to station 1.
6	lock LEDs & reset button	The Num Lock, Caps Lock, Scroll Lock LEDs are located here. A reset button is located just to the right of the Lock LEDs. Press this button in with a thin object to perform a system reset.
7	port selection buttons and LEDs	To access a port on the currently selected station press its corresponding port selection button. Indicator LEDs are built into the switches: ◆ An **On Line** LED lights to indicate that the computer attached to its corresponding port is up and running. A **Selected** LED lights to indicate which port has the KVM focus.

LCD Module

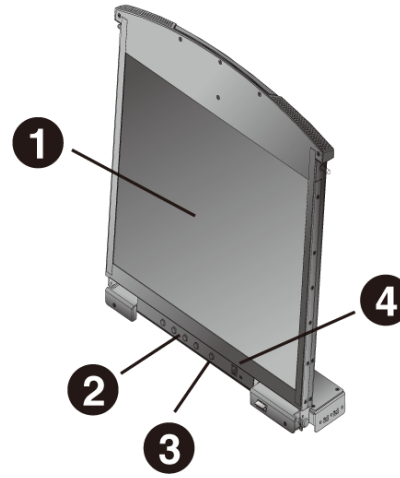

No.	Component	Description
1	LCD display	To access the LCD monitor, slide the LCD module out and flip up the cover. See *Opening the Console*, page 25, for details on sliding the LCD module out.
2	LCD controls	These buttons control the position and picture settings of the LCD display. See *LCD OSD Configuration*, page 31, for details.
3	LCD On / Off button	Push this button to turn the LCD monitor on and off. The button lights when the LCD monitor is off to indicate that only the monitor is off — not the KVM switch itself.)
4	firmware upgrade section	**Firmware upgrade port:** The firmware upgrade cable that transfers the firmware upgrade data from the administrator's computer to the KL1508Ai / KL1516Ai plugs into this RJ-11 connector. **Firmware upgrade switch:** During normal operation this switch should be in the NORMAL position. (See *The Firmware Upgrade Utility*, page 157 for firmware upgrading details.)

Rear View

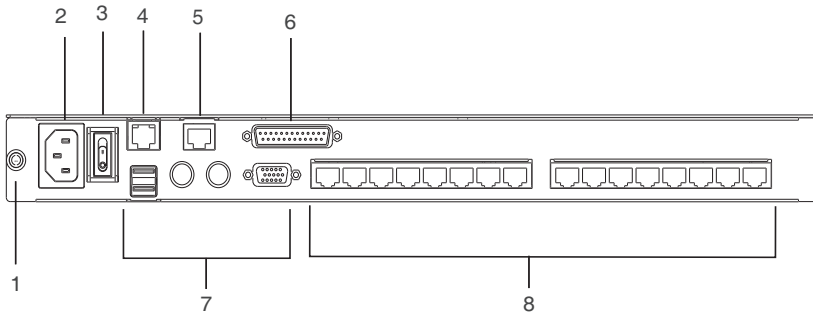

No.	Component	Description
1	grounding terminal	The grounding wire used to ground the switch attaches here.
2	power socket	This is a standard 3-pin AC power socket. The power cord from an AC source plugs in here.
3	power switch	This is a standard rocker switch that powers the unit on and off.
4	LAN port	The cable that connects the to the LAN plugs in here. The LEDs indicate data transmission speed: orange: 10 Mbps / green: 100 Mbps
5	PoN port	This connector is provided for a Power over the Net™ (PoN) unit to plug into. A PoN device allows computers attached to the KL1508Ai / KL1516Ai to be booted remotely over the net. Contact your dealer for more details.
6	daisy chain port	When daisy chaining units (See *Daisy Chaining*, page 22), the daisy chain cable plugs in here.
7	local console port selection	If this is a single station installation, or if this is the first station of a daisy chained installation, the keyboard, monitor, and the mouse that make up the local console plug in here.
8	KVM port selection	The Cat 5e/6 cables that link to the KVM Adapter Cables (which link to the computers) plug in here.

* The KL1516Ai is pictured above. The KL1508Ai rear panel is the same as that of the KL1516Ai, except that it has 8 KVM ports instead of 16.

This Page Intentionally Left Blank

Chapter 2
Hardware Setup

Before You Begin

1. Important safety information regarding the placement of this device is provided on page 185. Please review it before proceeding.
2. Make sure that power to all the devices you will be connecting up has been turned off. You must unplug the power cords of any computers that have the Keyboard Power On function.
3. Packing material has been inserted to protect the KL1508Ai / KL1516Ai during shipping. Slide the LCD module out (see *Opening the Console*, page 25), until the packing material is visible. Remove the packing material before installing the unit, as shown in the diagram below.

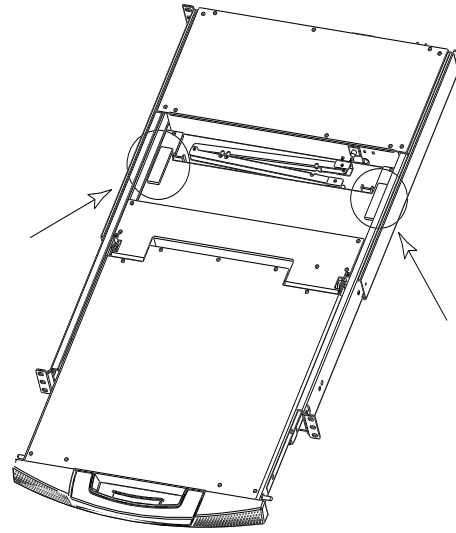

4. Please operate the device with caution when under high environmental temperatures, as the surface of the device may become overheated under such conditions. For instance, the surface temperature of the device may reach 70 ºC (158 ºF) or higher when the environmental temperature reaches close to 50 ºC (122 ºF).

Standard Rack Mount

A standard rack mount kit is provided with your KL1508Ai / KL1516Ai. The kit enables the switch to be mounted onto a rack with a depth of 42 – 77 cm.

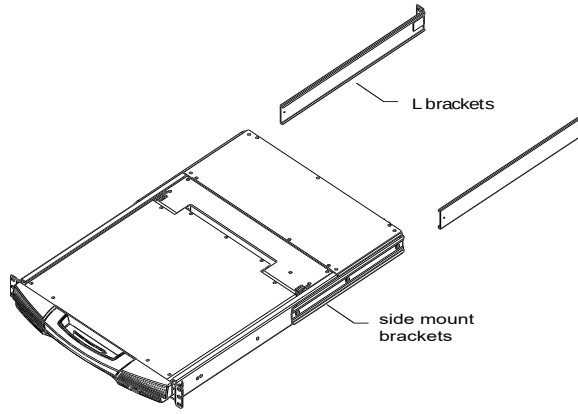

Note: 1. It takes two people to mount the switch: one to hold it in place, the other to screw it in.

2. The standard rack mount kit does not include screws or cage nuts. If you need additional screws or cage nuts, contact your rack dealer.

3. Optional mounting kits – including single person *Easy Installation* kits – are available with a separate purchase. See *Optional Rack Mounting*, page 212, for details.

To rack mount the switch, please refer to the LCD KVM Standard Rack Mount Installation Guide.

Front-L Brackets Mounting

To have a comfortable and safe posture, install the Front-L brackets (supplied in the extension kit) which provide an extension at the front of the rack for the unit to slide further out and thus allowing you to tilt the LCD screen more. For more information on how to mount the Front-L brackets, please refer to the Front-L Bracket / Extension Kit Installation Guide.

Single-Stage Installation

In a single-stage installation, there are no additional switches daisy chained down from the first unit. To set up a single stage installation, refer to the installation diagrams beginning on the following page (the numbers in the diagram correspond to the numbers of the installation steps), and do the following:

1. Ground the KL1508Ai / KL1516Ai by connecting one end of a grounding wire to the grounding terminal, and the other end of the wire to a suitable grounded object.

   Note: Do not omit this step. Proper grounding helps to prevent damage to the unit from power surges or static electricity.

2. (Optional) If you choose to install an external console, plug your keyboard, monitor, and mouse into the *console ports* located on the switch's rear panel. The ports are color coded and marked with an icon to identify themselves.
3. For each of the computers you are installing, use Cat 5e cable to connect any available KVM port to a KVM adapter cable that is appropriate for the computer you are installing. (See *KVM Adapter Cables*, page 8, for adapter cable details.)

   Note: The maximum supported distance to the adapter cable is 50 m.

4. Connect the KVM Adapter cable to the computer. Refer to the *KVM Adapter Cable Installation Diagram*, page 20, to plug the adapter cable connectors into their respective ports on the computers you are installing.
5. Plug the LAN or WAN cable into the KL1508Ai / KL1516Ai's LAN port.
6. Connect the power cord to the switch and to an AC power source.

After the KL1508Ai / KL1516Ai is cabled up, you can turn on the power. After the switch is powered up, you can turn on the servers.

Single-Stage Installation Diagram

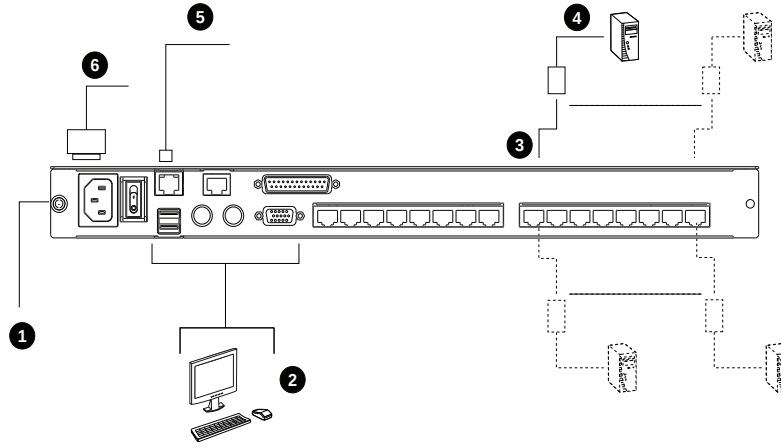

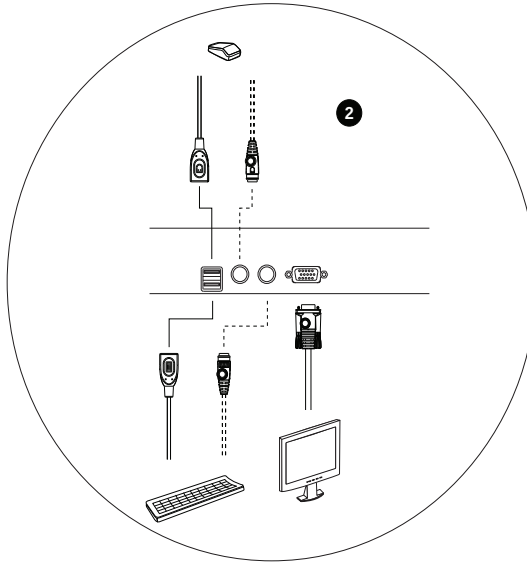

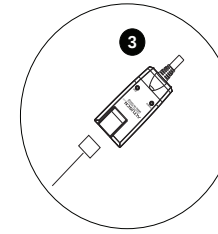

KVM Adapter Cable Installation Diagram

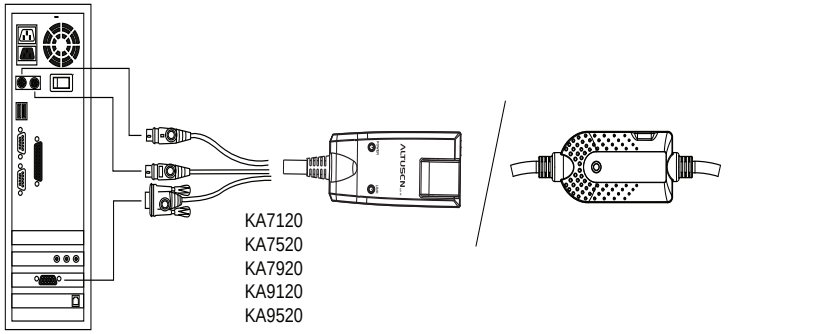

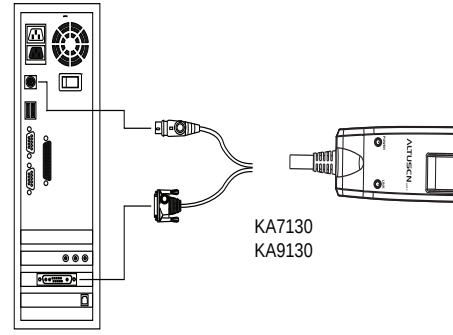

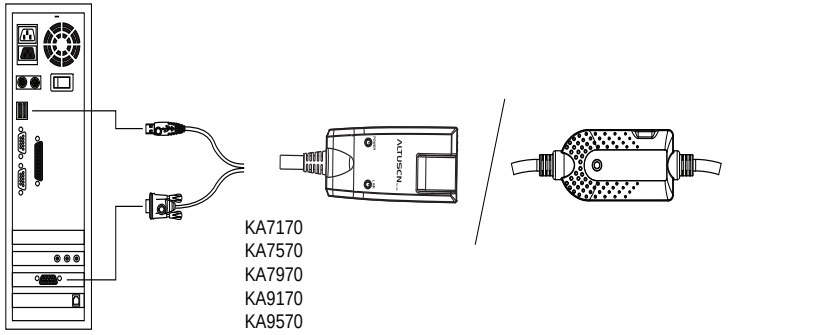

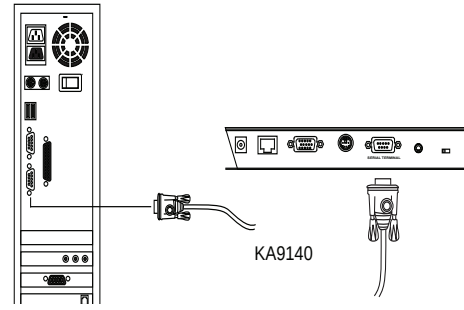

KVM Adapter Cable Installation Diagram cont.

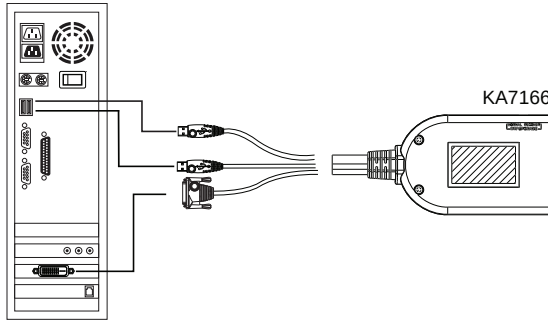

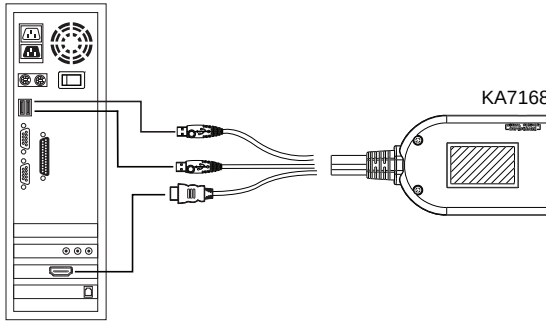

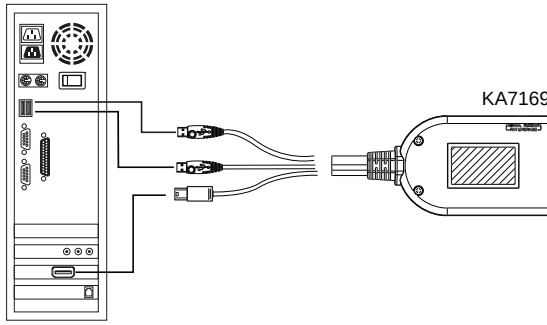

Daisy Chaining

To control even more computers, up to 15 additional compatible KVM switches can be daisy chained from the original KL1508Ai or KL1516Ai. As many as 256 computers can be controlled from a single console in a complete installation.

Note: Since it would be unnecessarily wasteful and expensive to use KL1508Ai / KL1516Ai switches for daisy chaining (there is no point in having consoles on the chained switches), switches without LCD consoles are used instead. Please see the table, *Supported Devices*, page 210 for a list of ATEN switches that can be installed on a KL1508Ai / KL1516Ai daisy chain.

Tables showing the relation between the number of computers and the number of KL1508Ai / KL1516Ai units needed to control them are provided on page 209.

To set up a daisy chained installation, make sure that power to all the devices you will be connecting up has been turned off, and refer to the *Daisy Chain Installation Diagram*, page 24 as you do the following:

1. Use a daisy chain cable set to connect the *chain out* port of the first station KL1508Ai / KL1516Ai unit to the *chain in* port of the chained station compatible KVM Switch unit (first station out to second station in, second station out to third station in, etc.).

   Note: 1. You cannot use the chain in port of the first station, since it is the highest level first station.

   2. Daisy chain cable sets require a separate purchase. See your dealer for details.

2. Cable up the computers and the switch according to the information provided under *Single-Stage Installation*, page 18.
3. Repeat the above for any other switches you want to add to the chain.
4. Power up the installation according to the following procedure:

   a) Plug in the power cord for the first station. Wait for the unit to ascertain its station ID and display it on the station ID LED. (The station ID for the first stage unit is 01, the ID for the second stage unit is 02, the ID for the third stage unit is 03, etc.)

b) Power on each station on the installation in turn (second station, then third station, etc.). In each case, wait for the station ID to be ascertained and displayed before powering on the next station.

c) After all the stations are up, power on the computers.

Daisy Chain Installation Diagram

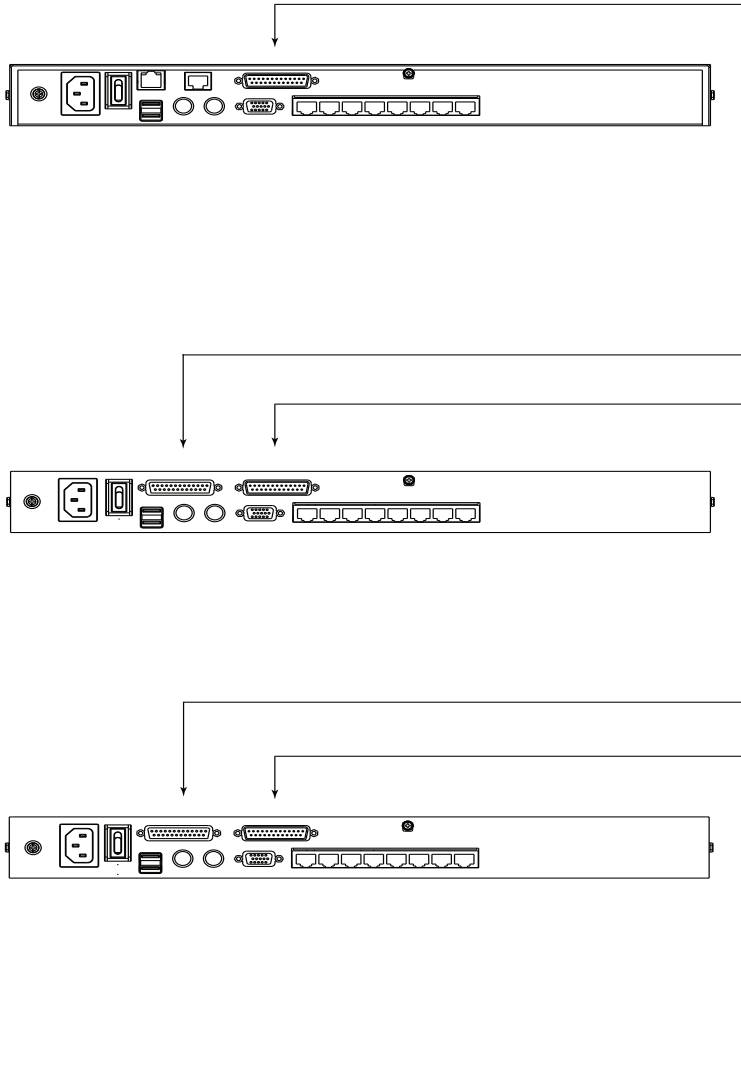

Chapter 3
Basic Operation

Opening the Console

The KL1508Ai / KL1516Ai's console consists of two modules: an LCD display module located under the top cover; and a keyboard / touchpad module below the LCD module.

The modules can either slide together, or independently. This allows you to have the LCD display available for viewing while the keyboard / touchpad module is conveniently out of the way when not in use.

Opening Separately

1. Pull the release catch to release the console, and pull the top panel a few centimeters toward you. Once the console has been released, you can let go of the catch.

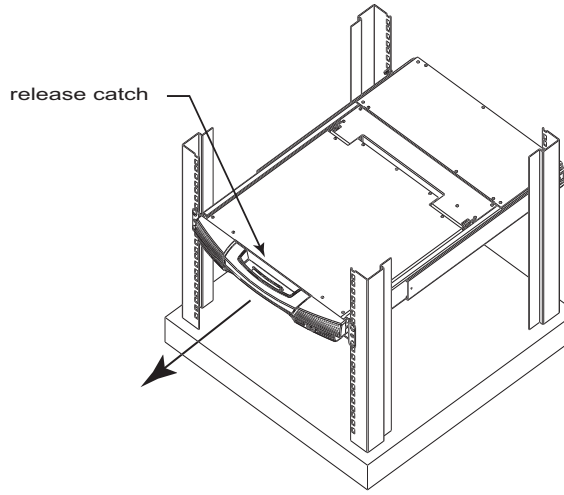

(Continues on next page.)

(Continued from previous page.)

2. Pull the top panel all the way out until it clicks into place.

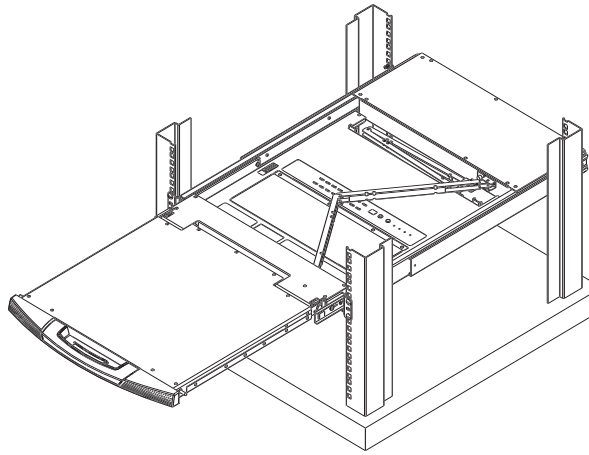

3. Rotate the top panel all the way back to expose the LCD screen.

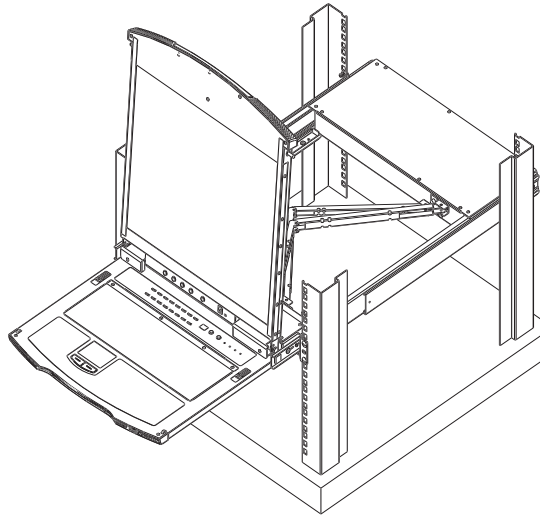

4. Reach underneath and pull the keyboard module all the way out until it clicks into place.

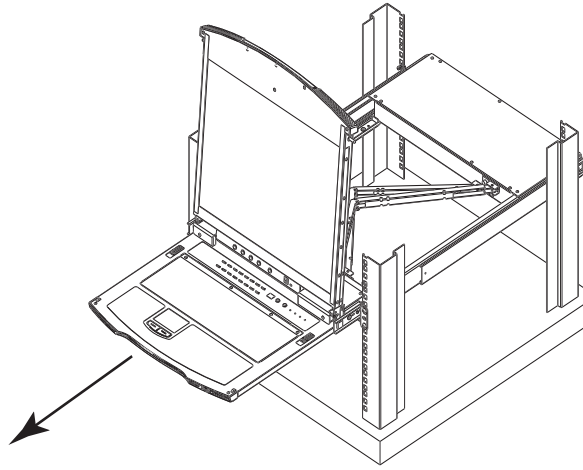

Opening Together

Refer to the diagrams in the *Opening Separately* section as you do the following:

1. Pull the release catch and pull the top and bottom panels out until the keyboard module clicks into place.

   Note: Once the console has been released, you can let go of the catch.

2. Pull the top panel the rest of the way out until it clicks into place.
3. Rotate the top panel all the way back to expose the LCD screen.

Note: Refer to the warning regarding placing excessive weight on the keyboard module on the following page.

Operating Precautions

The maximum load bearing capacity of the keyboard module is 20 kg. Failure to heed the information below can result in damage to the keyboard module.

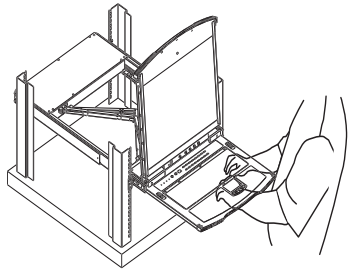	RIGHT Rest your hands and arms lightly on the keyboard module as you work.
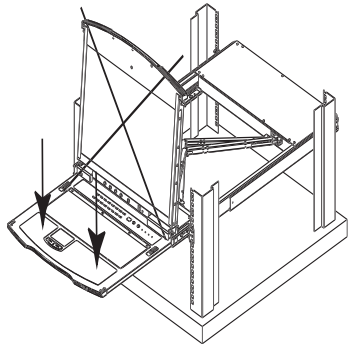	WRONG! ◆ **DO NOT** lean your body weight on the keyboard module. ◆ **DO NOT** place heavy objects on the keyboard module.

Closing the Console

1. Pull the release catches located on either side of the keyboard toward you to release the keyboard module, then slide the module slightly in.

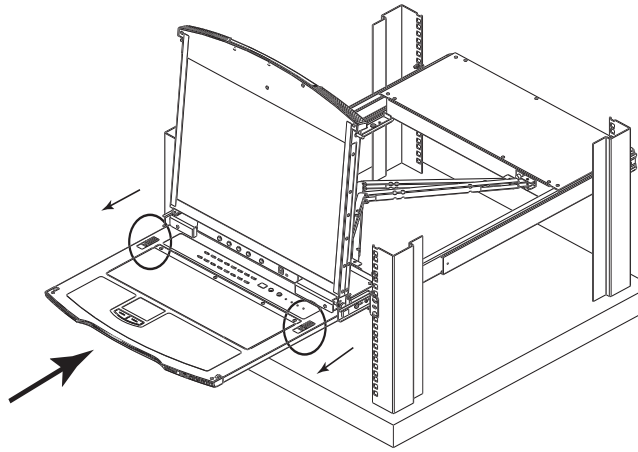

2. Let go of the catches. Using the front handle, push the keyboard module all the way in.

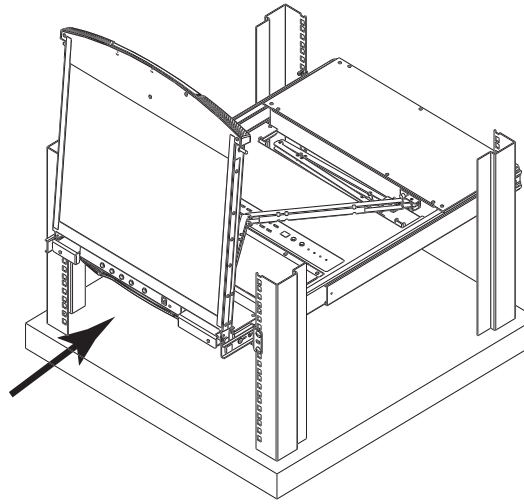

3. Rotate the LCD module all the way down, then pull the rear catches to release the LCD module.

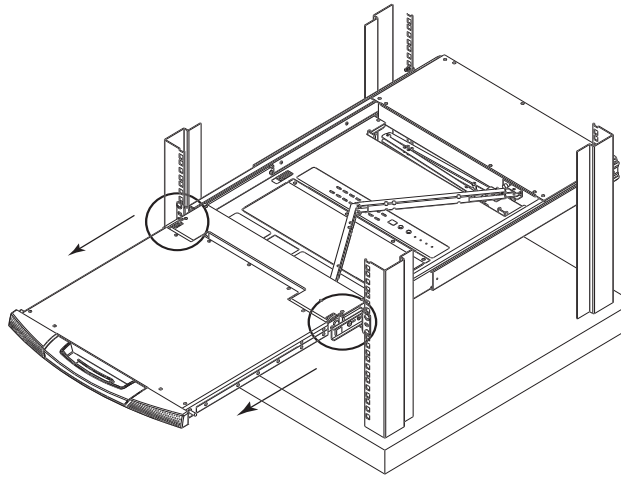

4. Using the front handle, push the module all the way in.

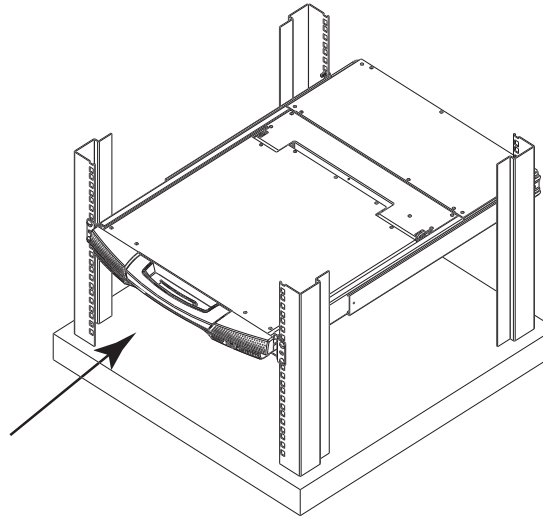

Touchpad Operation

Our touchpad supports two-finger scrolling operation that allows you to initiate scrolling on the touchpad with vertically movements. To do so, simply place two fingers down anywhere on the touchpad, and move them in a desired direction.

LCD OSD Configuration

The LCD Buttons

The LCD OSD allows you to set up and configure the LCD display. Four buttons (see *LCD controls*, page 12), are used to perform the configuration, as described in the table below:

Button	Function
MENU	When you have not entered the LCD OSD Menu function, pressing this button invokes the Menu function and brings up the Main Menu.
▶|▲	When navigating through the menus, this button moves you right or up. When making an adjustment, it increases the value.
◀|▼	When navigating through the menus, this button moves you left or down. When making an adjustment, it decreases the value.
EXIT	◆ When you have not entered the LCD OSD Menu function, pressing this button performs an auto adjustment. An auto adjustment automatically configures all the settings for the LCD panel to what the OSD considers their optimum values to be. ◆ When you have entered the LCD OSD Menu function, pressing this button exits the current menu and returns you to the previous menu. Use it to leave an adjustment menu when you are satisfied with the adjustment you have made. ◆ When you are at the Main Menu, pressing this button exits the LCD OSD.

The Adjustment Settings

An explanation of the LCD OSD adjustment settings is given in the table below:

Setting	Explanation
Brightness	Adjusts the background black level of the screen image.
Contrast	Adjusts the foreground white level of the screen image.
Phase	If pixel jitter or horizontal line noise is visible on the display, your LCD may have the wrong phase setting. Adjust the phase setting to eliminate these problems.
Clock	If vertical banding is visible on the display, your LCD may have the wrong clock setting. Adjust the clock setting to eliminate vertical banding.
H-Position	Positions the display area on the LCD panel horizontally (moves the display area left or right).
V-Position	Positions the display area on the LCD panel vertically (moves the display area up or down).
Color Temperature	Adjusts the color quality of the display. You can adjust the “warmth” value, color balance, etc. The *Adjust Color* selection has a further submenu that lets you fine tune the RGB values.
Language	Selects the language that the OSD displays its menus in.
OSD Duration	Lets you set the amount of time that the OSD displays on the screen. If there is no input for the amount of time you choose, the OSD display turns off.
Reset	Resets the menu and submenu adjustments (except for language settings) to the original factory default settings.

Port Selection

KL1508Ai / KL1516Ai installations provide three methods to obtain instant access to any computer in your installation: Manual, OSD/GUI, and *Hotkey*.

Manual

For manual port selection, simply press the Port Switch that corresponds to the device you wish to access.

OSD / GUI

The KL1508Ai / KL1516Ai provides menu driven interfaces to the computer switching procedure. There are two systems: A text-based OSD when you log in from the local console; and a graphical user interface (GUI) when you log in remotely over the internet. Local console OSD operation is discussed in the next chapter; GUI operation is discussed from Chapter 5 onwards for Internet browser, and Windows and Java logins.

Hotkeys

Hotkeys allow you to conveniently provide KVM focus to a particular computer from the local console keyboard, instead of having to manually select them by pressing Port Selection switches. See *Hotkey Port Control*, page 49, for details.

Hot Plugging

The KL1508Ai / KL1516Ai supports hot plugging – components can be removed and added back into the installation by unplugging and replugging their cables from their ports without the need to shut the unit down. In order for hot plugging to work properly, however, the procedures described below must be followed.

Hot Plugging Stations

You can switch station positions by simply unplugging from the old parent and plugging into a new one. After you do, in order for the OSD menus to correspond to the change, you must reset the OSD. See *RESET STATION IDS*, page 45, for details.

Hot Plugging KVM Ports

After switching KVM ports, in order for the OSD menus to correspond to the change, you must manually reconfigure the OSD information for the new Port information. See *F3: SET*, page 41, and the Port Setting selections under the *F4 ADM* function, page 44, for details.

Note: If the computer's Operating System doesn't support hot plugging, this function may not work properly.

Hot Plugging Console Ports

Keyboard, monitor, and mouse can all be hot plugged. When hot plugging the mouse:

- You may unplug the mouse and plug it back in again (to reset the mouse, for example), as long as you use the *same* mouse.
- If you plug in a different mouse, all the stations and all the computers on the installation must be shut down for 10 seconds, then restarted following the Power Up Sequence described under Step 6 on page 22.
- Some older operating systems may not support hot-plugging.

Note: If, after hot plugging (or at any other time), there is no response to keyboard and/or mouse input, perform a Keyboard and Mouse Reset by pressing in the Reset switch (see page 55).

Powering Off and Restarting

If it becomes necessary to power off the KL1508Ai / KL1516Ai, or if the switch loses power and needs to be restarted, before starting it back up you must follow these procedures:

1. Shut down all the computers that are attached to it.

   Note: You must unplug the power cords of any computers that have the Keyboard Power On function.

2. Wait 10 seconds then power it back on. If you have shut down more than one station, power up the highest station first and work your way down to the lowest one. Wait for each station to display its Station ID on the front panel LED before powering on the next one.
3. After the station(s) is (are) up, power the computers back on.

Port ID Numbering

Each computer on the installation is assigned a unique Port ID. The Port ID is a one or two segment number that is determined by the Stage Level and KVM Port number of the KVM switch that the computer is connected to.

The first segment represents the KVM Port number of the First Stage unit; the second segment represents the KVM Port number of the Second Stage unit.

A computer attached to a First Stage unit has a one segment Port ID (from 1–16) that corresponds to the KVM Port number that it is connected to.

A computer attached to a Second Stage unit has a two segment Port ID:

- The second segment (from 1–16), represents the KVM Port number on the Second Stage unit that the computer is connected to. The first segment (from 1–16) represents the KVM Port number on the First Stage unit that the Second Stage unit links back to.
- For example, a Port ID of 12–3 refers to a computer that is connected to KVM Port 3 of a Second Stage unit that links back to KVM Port 12 of the First Stage unit.

This Page Intentionally Left Blank

Chapter 4
OSD Operation

OSD Overview

The On Screen Display (OSD) is a menu-driven method to handle computer control and switching operations. All procedures start from the OSD main screen. To display the main screen, press the dedicated invocation key **KVM OSD** provided on the KL1508Ai / KL1516Ai's keyboard module.

OSD Login

The OSD incorporates a two-level (administrator / user) password system. Before the OSD main screen comes up, a login dialog box appears that asks for a username and password. You must provide a valid username and password in order to continue.

The first time that the OSD is accessed, you must use the default username and password *administrator*and *password*. For security purposes, we strongly recommend changing these to something unique.

After logging in with the default username and password, the OSD main screen opens in Administrator mode. In this mode, you have administrator privileges, with access to all administrator and user functions, and can set up operations (including password authorization for the future), as you like.

OSD Hotkey

The OSD Hotkey is enabled to *[Scroll Lock] [Scroll Lock]* by default. Using the OSD hotkey, users can access the OSD, on the LCD or an external console monitor while also displaying any port on the KL1508Ai / KL1516Ai.

Note: To adjust the OSD hotkey settings, see *OSD HOTKEY*, page 41.

OSD Main Screen

When you invoke the OSD, a screen similar to the one below appears:

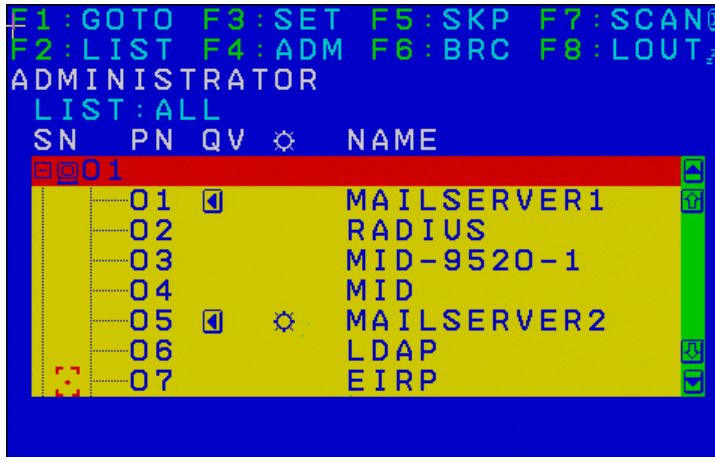

Note: The diagram depicts the Administrator's Main Screen. The User Main Screen does not show the **F4** and **F6** functions, since these are reserved for the administrator and can't be accessed by ordinary users.

Manufacturing Number

The *MFG Number* (Manufacturing Number) is an internal serial number used by ATEN's factory and technical support staff to identify products. This number does not affect products' warranty. If your product requires after-sales services, you may provide the MFG Number to ATEN's sales or technical support staff to identify the product and model number.

OSD Navigation

- To dismiss the menu, and deactivate the OSD, click the **X** at the upper right corner of the OSD Window or press **Esc**.
- To Logout click **F8** or the ZZZ symbol at the top of the Main Screen, or press **[F8]**.
- The OSD uses a tree view. To see the ports for a particular station, click the plus sign [+] in front of the station number. The port number list drops down. To dismiss the list, click the circle symbol [**o**] in front of the station number.
- To move up or down through the list one line at a time, click the up and down triangle symbols (▲▼) or use the up and down arrow keys. If there are more list entries than there is room for on the Main Screen, the screen will scroll.
- To move up or down through the list one screen at a time, click the up and down arrow symbols (🡅🡇), or use the [Pg Up] and [Pg Dn] keys. If there are more list entries than there is room for on the Main Screen, the screen will scroll.
- To bring the KVM focus to a port, double-click it, or move the highlight bar to it and then press **[Enter]**.
- After executing any action, you automatically go back to the menu one level above.

OSD Main Screen Headings

Heading	Explanation
SN-PN	This column lists the port ID numbers (station number-port number) for all the KVM ports on the installation. The simplest method to access a particular computer is to click it, or move the highlight bar to it, and then press **[Enter]**.
QV	If a port has been selected for Quick View scanning (see *SET QUICK VIEW PORTS*, page 43), an arrowhead displays in this column.
☼	The computers that are powered on and are online have a sun symbol in this column.
NAME	If a port has been given a name (see *EDIT PORT NAMES*, page 44), its name appears in this column.

OSD Functions

OSD functions are used to configure and control the OSD. For example, you can rapidly switch to any port, scan selected ports only, limit the list you wish to view, designate a port as a Quick View Port, create or edit a port name, or make OSD setting adjustments.

To access an OSD function:

1. Either click a function key field at the top of the Main Screen, or press a function key on the keyboard.
2. In the submenus that appear make your choice either by double clicking it, or moving the highlight bar to it, and then pressing **[Enter]**.
3. Press **[Esc]** to return to the previous menu level.

F1: GOTO

Accessing the GOTO function allows you to switch directly to a port either by keying in the port's name or its port ID.

- To use the Name method, key in **1**, key in the port's name, and then press **[Enter]**.
- To use the Port ID method, key in **2**, key in the port ID, and then press **[Enter]**.

Note: You can key in a partial name or port ID. The screen will show all the computers that the user has *View* rights to that match the name or port ID pattern, regardless of the current *List* settings (see *F2: LIST*, page 40, for details).

To return to the OSD Main Menu without making a choice, press **[Esc]**.

F2: LIST

Many of the switch's OSD functions only operate on the computers currently selected for listing on the Main Screen. Accessing this function lets you

broaden or narrow the scope of ports that get listed. The submenu choices and their meanings are given in the table below:

Choice	Meaning
ALL	Lists all of the ports on the installation.
QUICK VIEW	Lists only the ports that have been selected as Quick View Ports (see *SET QUICK VIEW PORTS*, page 43).
POWERED ON	Lists only the ports that have attached computers Powered On.
QUICK VIEW + POWERED ON	Lists only the ports that have been selected as Quick View Ports (see *SET QUICK VIEW PORTS*, page 43), and that have their attached computers Powered On.

Move the highlight bar to the choice you want, then press **[Enter]**. An icon appears before the choice to indicate that it is the currently selected one.

F3: SET

Accessing this function allows the administrator and each user to set up an individual working environment. A separate profile for each operator is stored by the OSD and is activated according to the username provided during login.

To change a setting:

1. Double-click it; or move the highlight bar to it, then press **[Enter]**.
2. After you select an item, a submenu with further choices appears. To make a selection, either double click it; or move the highlight bar to it, then press **[Enter]**. An icon appears before the selected choice to indicate which one it is. The settings are explained in the following table:

Setting	Function
OSD HOTKEY	Disables or enables OSD Hotkey by choosing one of the following: *OFF*, [Scroll Lock] [Scroll Lock]; [Ctrl] [Ctrl] or [Alt] [Alt]. **Note:** By default, this function is set to *[Scroll Lock] [Scroll Lock]*.

Setting	Function
PORT ID DISPLAY POSITION	Allows you to position where the port ID appears on the monitor. The default is the upper left corner, but you can choose to have it appear anywhere on the screen. Use the mouse or the arrow Keys plus Pg Up, Pg Dn, Home, End, and 5 (on the numeric keypad with Num Lock off), to position the port ID display, then click or press [Enter] to lock the position and return to the Set submenu. **Note:** The setting affects the currently selected port. If you don't want to use the default position, you must change the setting for each port individually.
PORT ID DISPLAY DURATION	Determines how long a port ID displays on the monitor after a port change has taken place. There are two choices: **3 seconds** and **Off.**
PORT ID DISPLAY MODE	Selects how the port ID is displayed: the port number alone (**PORT NUMBER**); the port name alone (**PORT NAME**); or the port number plus the port name (**PORT NUMBER + PORT NAME**). The default is PORT NUMBER + PORT NAME).
SCAN DURATION	Determines how long the focus dwells on each port as it cycles through the selected ports in Auto Scan mode (see *F7: SCAN*, page 47). Key in a value from 1–255 seconds, then press **[Enter]**. Default is 5 seconds; a setting of 0 disables the Scan function.
SCAN/SKIP MODE	Selects which computers will be accessed under Skip mode (see *F5: SKP*, page 46), and Auto Scan mode (see *F7: SCAN*, page 47). Choices are: **ALL** – All the ports which have been set Accessible; **QUICK VIEW** – Only those ports which have been set Accessible and have been selected as Quick View Ports (see *SET QUICK VIEW PORTS*, page 43); **POWERED ON** – Only those ports which have been set Accessible and are Powered On; **QUICK VIEW + POWERED ON** – Only those ports which have been set Accessible and have been selected as Quick View Ports and are Powered On. The default is ALL.
SCREEN BLANKER	If there is no input from the console for the amount of time set with this function, the screen is blanked. Key in a value from 1–30 minutes, then press **[Enter]**. A setting of 0 disables this function. The default is Off.
HOTKEY COMMAND MODE	Enables / Disables the Hotkey function (see *OSD Operation*, page 37), in case a conflict with programs running on the computers occurs. The default is On.
HOTKEY	This setting selects the Hotkey invocation keys (see *Hotkey Operation*, page 49). Choices are **[NUM LOCK] + [-]**, or **[CTRL] + [F12]**. The default is **[NUM LOCK] + [-]**.
OSD LANGUAGE	Sets the language that the OSD displays in. Choices are: English, German, Japanese, Simplified Chinese, Traditional Chinese, Spanish, Russian, and French. The default is English.

Setting	Function
SET CONSOLE KEYBOARD	Sets the keyboard language mapping of the console keyboard. The default is Auto. If the switch does not automatically receive language mapping from the keyboard, it will set to English (US).
SET LOGOUT TIMEOUT	If there is no input from the console for the amount of time set with this function, the operator is automatically logged out. A login is necessary before the console can be used again. This enables other operators to gain access to the computers when the original operator is no longer accessing them, but has forgotten to log out. To set the timeout value, key in a number from 1–180 minutes, then press **[Enter]**. If the number is 0 (zero), this function is disabled. Default is Off.
ACTIVATE BEEPER	Choices are **Y** (for Yes), or **N** (for No). When activated, the beeper sounds whenever a port is changed, when activating the Auto Scan function (see *F7: SCAN*, page 47), or an invalid entry is made on an OSD menu. The default is On.
SET QUICK VIEW PORTS	This function lets the administrator select which ports to include as Quick View ports. ◆ To select/deselect a port as a Quick View Port, use the navigation keys to move the highlight bar to it, then press the [Spacebar]. ◆ When a port has been selected as a Quick View Port, an arrowhead displays in the QV column of the LIST on the Main Screen to indicate so. When a port is deselected, the arrowhead disappears. ◆ If one of the Quick View options is chosen for the LIST view (see *F2: LIST*, page 40), only a port that has been selected here will display on the List. ◆ If one of the Quick View options is chosen for Auto Scanning (see *SCAN/SKIP MODE*, page 42), only a port that has been selected here will be Auto Scanned. The default is for no ports to be selected.
PREFERRED RESOLUTIO N	This function allows you to set the preferred resolution for a second external display* connected to the switches console port, which will be sent to the KVM adapter cables. The KVM adapter cables provide the connected computer's video card with EDID information about the monitor connected to the switch. This affects the video quality displaying on the external console monitor. Choices are: ◆ **MONITOR DEFAULT SETTING** – Sends the EDID information provided by the switches LCD monitor – to the KVM adapter cable. ◆ **Alternative Resolution** – Sends the alternative resolution (EDID information) selected for the external display connected to the switches console port, to the KVM adapter cables. Select a resolution that best suits the video display for the monitor connected to the switches console port. **Note:** When using the built in LCD monitor the default resolution must be set to 1280x1024 60HZ. Only change the preferred resolution when connecting an external display to the console monitor port.

Setting	Function
TOUCHPAD	Enables / Disables the touchpad function of the console. Choices are **Y** (for Yes), or **N** (for No). The active status (Touchpad On / Touchpad Off) is also shown.

F4: ADM

F4 is an administrator only function. Accessing this function allows the administrator to configure and control the overall operation of the OSD. To change a setting double click it; or use the up and down arrow keys to move the highlight bar to it, then press **[Enter]**.

After you select an item, a submenu with further choices appears. Double click the choice you want, or move the highlight bar to it, then press **[Enter]**. An icon appears before the selected choice. The settings are explained in the table on the next three pages:

Setting	Function
SET IP ADDRESS	This function is used to select whether to assign the KL1508Ai / KL1516Ai's IP address automatically (DHCP), or to give it a fixed IP address. ◆ Enable DHCP to assign the IP address automatically. ◆ Disable DHCP to assign a fixed IP address and specify the IP, Mask, and Gateway in the appropriate fields. **Note:** The default setting for DHCP is disabled.
EDIT PORT NAMES	To identify which computer is attached to a particular port, every port can be assigned a name. This function allows the administrator to create, modify, or delete port names. To assign a port name: 1. Click the port you want, or use the navigation keys to move the highlight bar to it, then press **[Enter]**. 2. Key in the new port name, or modify/delete the old one. The maximum number of characters allowed for the port name is 14. Legal characters include: ◆ All alpha characters: **A–Z*** ◆ All numeric characters: **0–9** *You can enter the port names in either upper or lower case however the OSD displays the port name only in UPPERCASE. 3. When you have finished editing, press **[Enter]** to have the change take effect. To abort the change, press **[Esc]**.

Setting	Function
RESTORE DEFAULT VALUES	This function is used to undo all changes and return the setup to the original factory default settings (see *OSD Factory Default Settings*, page 216) – except for the *Names* settings that were assigned to the ports, which are saved.
CLEAR THE NAME LIST	This function clears the port name list.
RESET STATION IDS	If you change the position of one of the stations in the daisy chain, the OSD settings will no longer correspond to the new situation. This function directs the OSD to rescan the station positions of the entire installation and updates the OSD so that the OSD station information corresponds to the new physical layout. **Note:** Only the station numbers get updated. Except for the port names, all administrator settings (such as Set Quick View Ports), for all of the computers affected by the change, have to be manually redone.
SET OPERATING SYSTEM	Specifies the operating platform of the computer attached to each port. You must configure each port on the installation. For each port, press the [Spacebar] to cycle through the choices (PC, Mac or Sun). Repeat until all the ports have been set, then press [Esc]. The default is PC. **Note:** If you are installing a Sun or Mac computer it may not boot when you run it for the first time unless you first set the correct operating system for the port it is connected to.
SET CAT 5 LENGTH	Lets you specify how long the Cat 5e/6 cable between the port and the KVM adapter cable is. Press **[Spacebar]** to cycle through the cable length settings: **S**: Short – for up to 25 m **M**: Medium – for between 20 and 35 m **L**: Long – for above 35 m An S, M, or L appears next to the port to indicate the choice.
SET KEYBOARD LANGUAGE	Sets the keyboard language layout for the computers attached to each port. Press **[Spacebar]** to cycle through the choices: The default is English (US).
FIRMWARE UPGRADE	In order to upgrade the KL1508Ai / KL1516Ai and adapter cable firmware (see *The Firmware Upgrade Utility*, page 157) you must first enable *Firmware Upgrade* mode with this setting. When you bring up this menu, the current firmware version levels display. Select **Y** to enable Firmware Upgrade mode, or **N** to leave this menu without enabling it.
ADAPTER UPGRADE	This function allows the administrator to check the firmware version of the KVM adapter cable. When you bring up this menu, the current firmware version levels display. See *FIRMWARE UPGRADE*, above, also.

Setting	Function
SET CONSOLE MODE	This setting selects which console(s) (internal/external) are enabled: **0** Both Consoles enabled **1** LCD Console only **2** External console only Use the spacebar to cycle through the choices. The default is 0. Changes will not be saved until you logout.
SET VIDEO HV MODE	This setting selects the video mode (separate or composite video sync signals) the port(s) (internal/external) is using. Press **[Enter]** to enter this setting and see a list of ports. In the list, the "Mode" column will display the video mode choices, these are: **S** Separate (default) **C** Composite Use the **[Spacebar]** to cycle through the choices. Changes will not be saved until you exit to the main menu. **Note:** Some old adapters may not support HV mode and the "Mode" column will be empty.

F5: SKP

This function enables you to easily skip backward or forward, switching the console focus from the currently active KVM Port to the previous or next available one.

- The selection of computers to be available for Skip mode switching is made with the *Scan/Skip* mode setting under the **F3 SET** function (see page 42).
- When you are in Skip mode, press:

←	To skip to the previous port in the List.
→	To skip to the next port in the List.
↑	To skip to the last port of the previous station in the List.
↓	To skip to the first port of the next station in the List.

Note: When you skip, you only skip to the previous or next available computer that is in the *Scan/Skip* mode selection (see page 42).

- If a port has been selected for *Scan/Skip* mode, when the focus switches to that port a left/right triangle symbol appears before its port ID display.
- While Skip mode is in effect, the console will not function normally. You must exit Skip mode in order to regain control of the console.
- To exit Skip mode, press the [Spacebar] or [Esc].

F6: BRC

F6 is an administrator only function. When this function is in effect, commands sent from the console are broadcast to all available computers on the installation.

This function is particularly useful for operations that need to be performed on multiple computers, such as performing a system wide shutdown, installing or upgrading software, etc.

- While BRC mode is in effect, a speaker symbol appears before the port ID display of the port that currently has the console focus.
- While BRC mode is in effect, the mouse will not function normally. You must exit BRC mode in order to regain control of the mouse.
- To exit BRC mode, invoke the OSD (with the OSD Hotkey), then click the **F6** field, or press [F6], to turn BRC mode off.

F7: SCAN

This function automatically switches among the available computers at regular intervals so that you can monitor their activity without having to take the trouble of switching manually.

- The selection of computers to be included for Auto Scanning is made with the *Scan/Skip* mode setting under the **F3 SET** function (see page 42).
- The amount of time that each port displays for is set with the *Scan Duration* setting under the **F3 SET** function (see page 42).
- As each computer is accessed, an **S** appears in front of the port ID display to indicate that it is being accessed under *Auto Scan* mode.
- While you are in Auto Scan mode, you can pause the scanning in order to keep the focus on a particular computer either by pressing **P**, or with a left click of the mouse. To resume scanning, press any key or left click again. See *Auto Scan Mode Switching*, page 52, for details.

- While Auto Scan mode is in effect, the console will not function normally. You must exit Auto Scan mode in order to regain control of the console.
- To exit Auto Scan mode, press the [Spacebar] or [Esc].

F8: LOUT

Clicking the **F8** field, or pressing **[F8]**, logs you out of the OSD and blanks the console screen. This is different from simply deactivating the OSD when you are at the Main Screen by pressing [Esc].

With this function you must log in all over again to regain access to the OSD, whereas with [Esc], all you have to do to reenter the OSD is tap the OSD Hotkey.

Note: 1. When you reenter the OSD after logging out, the screen stays blank except for the login dialog box. You must input your username and password before you can continue (see page 37).

2. If you reenter the OSD after logging out, and immediately use [Esc] to deactivate the OSD without having selected a port from the OSD menu, a Null Port message displays on the screen. The OSD hotkey will bring up the OSD Main Screen.

Chapter 5
Hotkey Operation

Hotkey Port Control

Hotkey port control allows you to provide KVM focus to a particular computer directly from the keyboard. The KL1508Ai / KL1516Ai provides the following Hotkey port control features:

- Selecting the Active Port
- Auto Scan Mode Switching
- Skip Mode Switching
- Computer Keyboard / Mouse Reset

The following settings can also be controlled in *Hotkey* mode:

- Setting the Beeper
- Setting the Quick Hotkey
- Setting the OSD Hotkey
- Setting the Port Operating System
- Restoring the OSD Default Values

Invoking Hotkey Mode

All Hotkey operations begin by invoking *Hotkey* mode.[1] To invoke *Hotkey* mode you may use two possible keystroke sequences shown below. Only one of the two key-sequences below can be operational (see *Setting the Hotkey key combination* on page 56):

Number Lock and Minus Keys

1. Hold down the **[Num Lock]** key;
2. Press and release the **[Minus]** key;
3. Release the **[Num Lock]** key:

   [Num Lock] + [-]

Control and F12 Keys

1. Hold down the **[Ctrl]** key;
2. Press and release the **[F12]** key;
3. Release the **[Ctrl]** key:

   [Ctrl] + [F12]

Hotkey Mode Environment

When *Hotkey* mode is active:

- A command line appears on the monitor screen. The command line prompt is the word *Hotkey:* in white text on a blue background, and displays the subsequent Hotkey information that you key in.
- Ordinary keyboard and mouse functions are suspended – only Hotkey compliant keystrokes (described in the sections that follow), can be input.

Exiting Hotkey Mode

Pressing **[Esc]** exits Hotkey mode.

1. Make sure that the *Hotkey Command Mode* function is enabled and that you key in the appropriate *Hotkey*. See page 42 for details.

Selecting the Active Port

Each computer port is assigned a port ID (see *Port ID Numbering*, page 35). You can directly access any computer with a Hotkey combination that specifies the port ID that the computer is connected to. The steps are:

1. Enter the Hotkey mode with the:

   [Num Lock] + [-] or [Ctrl] + [F12] combination.

2. Key in the port ID.

   The port ID numbers display on the command line as you key them in. If you make a mistake, use **[Backspace]** to erase it.

3. Press **[Enter].**

   After you press [Enter], the KVM focus switches to the designated computer and you automatically exit Hotkey mode.

Note: In Hotkey mode, the KVM focus will not switch to a port if an invalid switch or port number is entered. The Hotkey command line will continue to display on the screen until you enter a valid switch and port number combination, or exit Hotkey mode.

Auto Scan Mode Switching

Auto Scan automatically switches among all the active computer ports that are accessible to the currently logged on user at regular intervals. This allows their activity to be monitored automatically (See *SKAN/SKIP MODE* of the OSD F3 SET function, page 42).

Setting the Scan Interval

The amount of time Auto Scan keeps the focus on each port is set with the *SCAN DURATION* setting of the OSD **F3 SET** function (see page 42). You can change the scan interval, before you activate Hotkey Auto Scanning, by entering the following Hotkey combination:

1. Enter the Hotkey mode:

   [Num Lock] + [-] or [Ctrl] + [F12] combination.

2. Key in **[A][n]**

   Where **[A]** is the letter **A**, and **[n]** is a number from 1–255 that represents the length of the focus time in seconds.

   The letter **A** and the numbers display on the command line as you key them in. Use **[Backspace]** to erase any wrong entry.

3. Press **[Enter]**

   After you press [Enter], you exit Hotkey mode, and are ready to start Auto Scanning.

Entering Auto Scan

To enter the Auto Scanning mode, key in the following Hotkey combination:

1. Enter the Hotkey mode:

   [Num Lock] + [-] or [Ctrl] + [F12] combination.

2. Press **[A] + [Enter]**.

   - While you are in Auto Scan mode, you can pause the scanning to keep the focus on a particular computer by pressing **[P]**. When Auto Scanning is paused, the Command Line displays: **Auto Scan: Paused.**

   When you want to keep the focus on a particular computer, *Pausing* is more convenient than exiting Auto Scan mode. When you resume scanning it starts at the computer where you paused. If you exited and

then restarted Auto Scanning, it starts, at the beginning, from the first computer on the installation.

To resume Auto Scanning, press any key. Scanning continues from the computer you paused at.

- While the Auto Scan mode is operating, ordinary keyboard and mouse functions are suspended - only Auto Scan mode compliant keystrokes can be input. You must exit Auto Scan mode to regain normal control of the console.

Exiting Auto Scan

1. To exit Auto Scan mode press **[Esc]** or **[Spacebar]**. Auto Scanning stops when you exit Auto Scan mode.

Skip Mode Switching

This feature allows you to switch between computers in order to monitor them manually. You can focus on a particular port for as long as you like – as opposed to auto-scanning, which automatically switches the port focus after a fixed interval.

Entering Skip Mode

To enter *Skip* mode, key in the following Hotkey combination:

1. Enter the Hotkey mode by pressing the:

   [Num Lock] + [-] or [Ctrl] + [F12] combination.

2. Press one of the **[Arrow]** keys.

   After you press one of the keyboard arrows, you automatically exit Hotkey mode and enter *Skip* mode where you can switch ports as follows:

←	Skips to the first accessible port. (See *SCAN/SKIP MODE*, page 42, for information regarding accessible ports.)
→	Skips to the next accessible port.
↑	Skips to the last accessible port of the previous station.
↓	Skips to the first accessible port of the next station.

   Once you are in *Skip* mode, you can continue skipping by pressing the arrow keys. You do not have to use the [Num Lock] + [-] combination again.

   While *Skip* mode is in effect, ordinary keyboard and mouse functions are suspended – only *Skip* mode compliant keystrokes can be input. You must exit *Skip* mode to regain normal control of the console.

Exiting Skip Mode

1. To exit *Skip* mode, press [Esc] or [Spacebar] .

Computer Keyboard / Mouse Reset

If either the keyboard or mouse stop functioning on the computer connected to the currently selected port, you can perform a keyboard / mouse reset on the computer by executing the following steps:

1. Enter the Hotkey mode with the:

   [Num Lock] + [-] or [Ctrl] + [F12] combination.

2. Press **[F5].**

   After you press [F5] you automatically exit *Hotkey* mode and regain keyboard and mouse control on the computer connected to the KVM port. If you fail to regain keyboard / mouse control on the computer after pressing [F5], perform a system reset. For more information see *lock LEDs & reset button*, page 11.

   This function is essentially the same as unplugging and replugging the keyboard and mouse on the target computer.

Setting the Hotkey Beeper ON/OFF

The beeper (see Activate Beeper, page 43) can be turned on and off with Hotkeys by the following steps:

1. Enter the Hotkey mode with the:

   [Num Lock] + [-] or [Ctrl] + [F12] combination.

2. Press **[B]**.

After you press **[B]**, the beeper turns on or off. The command line displays *Beeper On* or *Beeper Off* for one second; then the message disappears and you automatically exit Hotkey mode.

Setting the Hotkey key combination

The keys used to enter the *Hotkey Mode* (see *HOTKEY COMMAND MODE*, page 42) can be switched between:

[Num Lock] + [-], and **[Ctrl] + [F12]**

by the following steps:

1. Enter the Hotkey mode with the:

   [Num Lock] + [-] or [Ctrl] + [F12] combination.

2. Press **[H]**.

   After you press [H], the command line displays *HOTKEY HAS BEEN CHANGED* for one second; then the message disappears and you automatically exit *Hotkey* mode.

Setting the OSD Hotkey combination

The *Hotkeys* used to access the *OSD* (see *OSD HOTKEY*, page 41) can be switched between *OFF*, **[Scroll Lock] [Scroll Lock], [Ctrl] [Ctrl],** and **[Alt] [Alt]** by the following steps:

1. Enter the Hotkey mode with the:

   [Num Lock] + [-] or [Ctrl] + [F12] combination.

2. Press **[T]**.

After you press **[T]**, the command line displays *HOTKEY HAS BEEN CHANGED* for one second; then the message disappears and you automatically exit *Hotkey* mode.

Setting the Port Operating System

A port's operating system configuration can be matched to that of the computer attached to the port by performing the following steps:

1. Enter the Hotkey mode with the:

   [Num Lock] + [-] or [Ctrl] + [F12] combination.

2. Press a **[Function]** key, where **[Function]** refers to one of the function keys in the following table:

Key	Description
F1	Sets the Port OS to Windows
F2	Sets the Port OS to Mac
F3	Sets the Port OS to Sun

After pressing a function key you automatically exit *Hotkey* mode.

Restore the Default Values

This administrator-only Hotkey restores the KL1508Ai / KL1516Ai default values (see on page 147) by performing the following steps:

1. Enter the Hotkey mode with the:

   [Num Lock] + [-] or [Ctrl] + [F12] combination.

2. Press **[R]**.

3. Press **[Enter]**.

After you press **[Enter]**, the command line displays *RESET TO DEFAULT SETTING* for three seconds; then the message disappears and you automatically exit *Hotkey* mode.

Hotkey Summary Table

[Num Lock] + [-] or [Ctrl] + [F12]	[A] [Enter]	Invokes *Auto Scan* mode. When *Auto Scan* mode is in effect, [P] or left-click pauses auto-scanning. When auto-scanning is paused, pressing any key or another left-click resumes auto-scanning.
	[B]	Toggles the Beeper On or Off.
	[Esc] or [Spacebar]	Exits hotkey mode.
	[F1]	Sets Operating System to Windows
	[F2]	Sets Operating System to Mac
	[F3]	Sets Operating System to Sun
	[H]	Toggles the Hotkey invocation keys.
	[Port ID] [Enter]	Switches access to the computer that corresponds to that Port ID.
	[R] [Enter]	Administrator only hotkey. It returns the switch's settings to their default values.
	[T]	Toggles the *OSD Hotkey* between *OFF*, *[Ctrl] [Ctrl]*, *[Alt] [Alt]*, and *[Scroll Lock] [Scroll Lock]*.
	[←]	Invokes Skip Mode and skips from the current port to the first accessible port previous to it.
	[→]	Invokes Skip Mode and skips from the current port to the next accessible port.
	[↑]	Invokes Skip Mode and skips from the current port to the last accessible port of the previous Station.
	[↓]	Invokes Skip Mode and skips from the current port to the first accessible port of the next Station.

Chapter 6
Keyboard Emulation

Mac Keyboard

The PC compatible (101/104 key) keyboard can emulate the functions of the Mac keyboard. The emulation mappings are listed in the table below.

PC Keyboard	Mac Keyboard
[Shift]	Shift
[Ctrl]	Ctrl
	⌘
[Ctrl] [1]	
[Ctrl] [2]	
[Ctrl] [3]	
[Ctrl] [4]	
[Alt]	Alt
[Print Screen]	F13
[Scroll Lock]	F14
	=
[Enter]	Return
[Backspace]	Delete
[Insert]	Help
[Ctrl]	F15

Note: When using key combinations, press and release the first key (Ctrl), then press and release the activation key.

Sun Keyboard

The PC compatible (101/104 key) keyboard can emulate the functions of the Sun keyboard when the Control key [Ctrl] is used in conjunction with other keys. The corresponding functions are shown in the table below.

PC Keyboard	Sun Keyboard
[Ctrl] [T]	Stop
[Ctrl] [F2]	Again
[Ctrl] [F3]	Props
[Ctrl] [F4]	Undo
[Ctrl] [F5]	Front
[Ctrl] [F6]	Copy
[Ctrl] [F7]	Open
[Ctrl] [F8]	Paste
[Ctrl] [F9]	Find
[Ctrl] [F10]	Cut
[Ctrl] [1]	
[Ctrl] [2]	-
[Ctrl] [3]	+
[Ctrl] [4]	
[Ctrl] [H]	Help
	Compose
	◆

Note: When using key combinations, press and release the first key (Ctrl), then press and release the activation key.

Chapter 7
Logging In

Overview

The KL1508Ai / KL1516Ai can be accessed via its Graphical User Interface (GUI) locally, and remotely from an internet browser; a Windows application (AP) program; and a Java application (AP) program.

No matter which access method you choose, the KL1508Ai / KL1516Ai switch's authentication procedure requires you to submit a valid username and password. If you supply invalid login information, the authentication routine will return an *Invalid Username or Password*, or *Login Failed* message. If you see this type of message, log in again with a correct username and password.

Note: If the number of invalid login attempts exceeds a specified amount, a timeout period is invoked. You must wait until the timeout period expires before you can attempt to log in again. See *Login Failures*, page 132 for further details.

Local Login

For instructions on logging in locally to your KL1508Ai/KL1516Ai refer to Chapter 4, *OSD Operation*.

Browser Login

The KL1508Ai / KL1516Ai can be accessed via an Internet browser running on any platform. To access the switch, do the following:

1. Open the browser and specify the IP address of the switch you want to access in the browser's location bar.

Note: 1. For security purposes, a login string may have been set by the administrator (see page 133 for details). If so, you must include a forward slash and the login string along with the IP address when you log in. For example:

```
192.168.0.100/kl1516ai
```

2. If you don't know the IP address and login string, ask your Administrator. The KL1508Ai / KL1516Ai's default IP address is: 192.168.0.60

2. When a Security *Alert* dialog box appears, accept the certificate – it can be trusted. (See *Trusted Certificates*, page 196, for details.) If a second certificate appears, accept it as well.

   Once you accept the certificate(s), the login page appears:

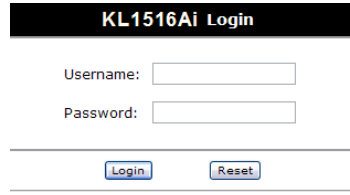

3. Provide your username and password (set by the administrator), then click **Login** to bring up the Web Main Page. For a discussion of the Web Main Page, see page 69.

Windows Client AP Login

The Windows AP Client allows direct remote access to Windows systems users, without having to go through a browser (although you initially download the Windows AP Client program from the browser page – see Chapter 15, *Download*). To connect to the KL1508Ai / KL1516Ai, go to the location on your hard disk that you downloaded the Windows AP Client program to, and double-click its icon (*WinClient.exe*). If this is the first time that you are running the utility, a dialog box appears requesting that you input your serial number:

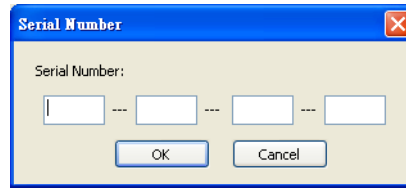

The serial number can be found on a sticker on the inside cover of the User Manual. Key in the serial number – 5 characters per box – then click OK to bring up the Windows Client Connection screen, shown below.

Note: 1. Letters in the serial number must be entered in upper case.

2. This dialog box only appears the first time you run the program. In the future, you go directly to the Windows Client Connection screen.

Alternatively, upgrade the KL1508Ai / KL1516Ai to firmware v1.6.154 or later. The serial number will no longer be required for running the utility using this firmware version.

To connect to the KL1508Ai / KL1516Ai, click the *WinClient.exe* program icon (on your desktop) to bring up the Windows Client Connection screen:

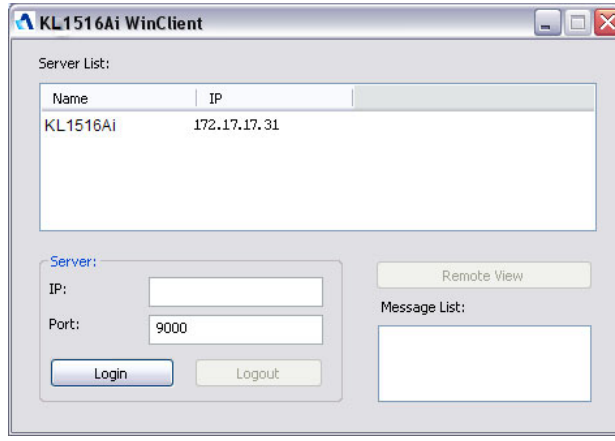

The Windows Client AP Connection Screen

A description of the Connection Screen is given in the following table:

Item	Description
Server List	Each time the WinClient.exe file is run, it searches the user's local LAN segment for KL1508Ai / KL1516Ai, and lists whichever ones it finds in this box. If you want to connect to one of these units, **double-click** it. (See *Connecting – Windows Client AP*, page 65 for details.) **Note:** 1. The switch will not appear in the list unless its *Enable Device List* configuration parameter has been enabled. 2. Only units whose Access Port settings for *Program* match the number specified for *Port* in the Server area of this dialog box appear in the Server List window.
Server	This area is used when you want to connect to a KL1508Ai / KL1516Ai at a remote location. You can drop down the IP list box and select an address from the list. If the address you want isn't listed, you can key in the target IP address in the IP field, and its port number in the Port field. (If you don't know the port number, contact your Administrator.) ◆ When the IP address and Port number have been specified, click **Connect**. (See *Connecting – Windows Client AP*, page 65 for details.) ◆ When you have finished with your session and come back to this dialog box, click **Disconnect** to end the connection.
Message List	Located just to the right of the Server panel, the Message List panel lists status messages regarding the connection to the KL1508Ai / KL1516Ai.
Switch to Remote View	Once you have been authenticated (see *Connecting – Windows Client AP*, page 65 for details), this button becomes active. Click it to switch to the GUI Main Page. The GUI Main Page is described on page 72.

Connecting – Windows Client AP

To connect to a KL1508Ai / KL1516Ai do the following::

1. From the *Server List* box, **double-click** the device that you wish to connect to.

   – Or –

   Specify its IP address and port number in the *Server IP* and *Port* input boxes.

2. Click **Connect**.

   The *Login* dialog box appears:

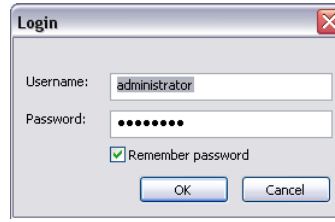

3. Key in a valid Username and Password, and then click **OK**.

4. Once you have been authenticated, the *Remote View* button becomes active:

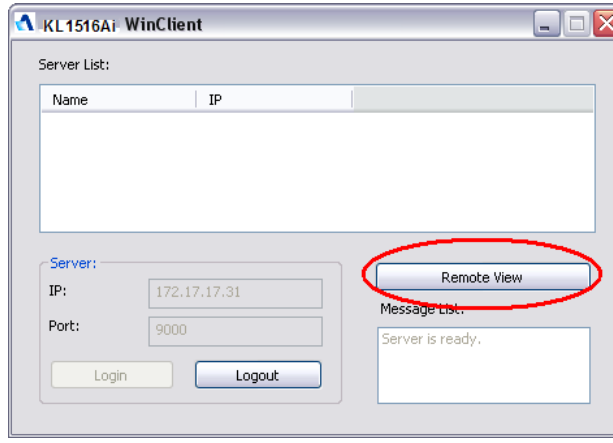

5. Click it to connect to the switch and bring up its GUI Main Page. For a description of the GUI Main Page, see page 72.

Java Client AP Login

The Java AP Client provides direct remote access to non-Windows systems users (although you initially download the Java AP Client program from the browser page – see Chapter 15, *Download*). To connect to the KL1508Ai / KL1516Ai, go to the location on your hard disk that you downloaded the Java AP Client program to, and double-click its icon (*JavaClient.jar*). If this is the first time that you are running the utility, a dialog box appears requesting that you input your serial number:

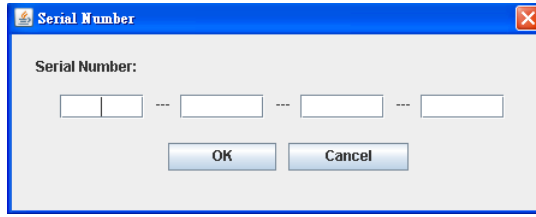

The serial number can be found on a sticker on the inside cover of the User Manual. Key in the serial number – 5 characters per box – then click OK to bring up the Windows Client Connection screen, shown below.

Note: 1. Letters in the serial number must be entered in upper case.

2. This dialog box only appears the first time you run the program. In the future, you go directly to the Java Client Connection screen.

Alternatively, upgrade the KL1508Ai / KL1516Ai to firmware v1.6.154 or later. The serial number will no longer be required for running the utility using this firmware version.
To connect to the KL1508Ai / KL1516Ai, click the *JavaClient.jar* program icon (on your desktop) to bring up the Windows Client Connection screen:

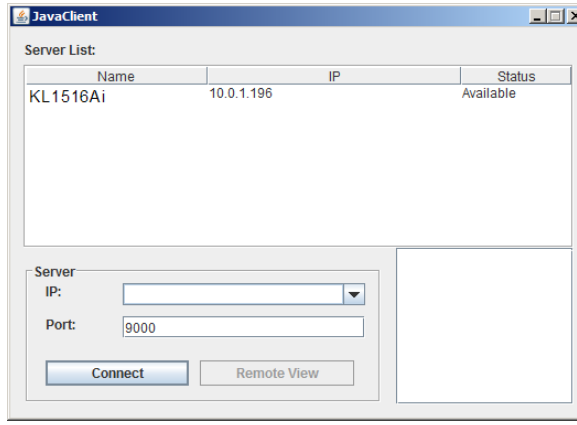

The Java Client AP Connection Screen

A description of the Connection Screen is given in the following table:

Item	Description
Server List	Each time the JavaClient.jar file is run, it searches the User's local LAN segment for KL1508Ai / KL1516Ai, and lists whichever ones it finds in this box. If you want to connect to one of these units, **double-click** it. (See *Connecting – Windows Client AP*, page 65 for details.) **Note:** 1. The switch will not appear in the list unless its *Enable Device List* configuration parameter has been enabled. 2. Only units whose Access Port settings for *Program* (see *Service Ports*, page 124) match the number specified for *Port* in the Server area of this dialog box appear in the Server List window.
Server	This area is used when you want to connect to a KL1508Ai / KL1516Ai at a remote location. You can drop down the IP list box and select an address from the list. If the address you want isn't listed, you can key in the target IP address in the IP field, and its port number in the Port field. (If you don't know the port number, contact your Administrator.) ◆ When the IP address and Port number have been specified, click **Connect**. (See *Connecting – Windows Client AP*, page 65 for details.) ◆ When you have finished with your session and come back to this dialog box, click **Disconnect** to end the connection.
Message Panel	Located just to the right of the Server panel, the Message panel lists status messages regarding the connection to the KL1508Ai / KL1516Ai.
Switch to Remote View	Once you have been authenticated (see *Connecting – Windows Client AP*, page 65 for details), this button becomes active. Click it to switch to the GUI Main Page. The GUI Main Page is described on page 72.

Connecting – Java Client AP

To connect to a KVM Over the NET™ switch do the following:

1. From the *Server List* box, **double-click** the device that you wish to connect to.

   – Or –

   Specify its IP address and port number in the *Server IP* and *Port* input boxes.

2. Click **Login**

   The *Login* dialog box appears:

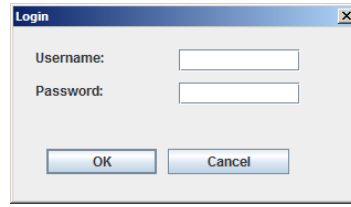

3. Key in a valid Username and Password, and then click **OK**.

4. Once you have been authenticated, the *Remote View* button becomes active:

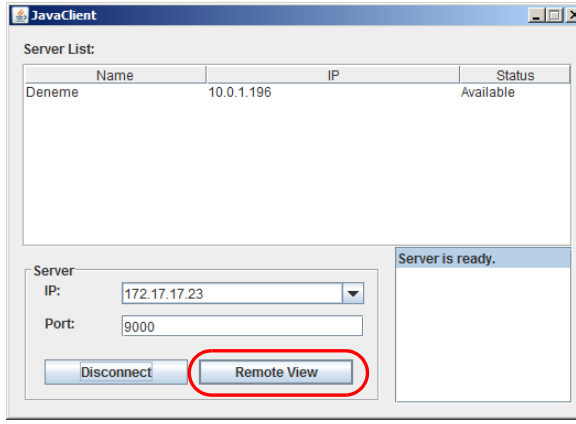

5. Click it to connect to the switch and bring up its GUI Main Page. For a description of the GUI Main Page, see page 72.

Chapter 8
The User Interface

Overview

Once you have successfully logged in, the KL1508Ai / KL1516Ai user interface Main Page appears. The look of the page varies slightly, depending on which method you used to log in. Each of the interfaces is described in the sections that follow.

The Web Browser Main Page

To ensure multi-platform operability, access to the KL1508Ai / KL1516Ai can be accomplished with most standard web browsers. Once users log in and are authenticated (see page 62), the *Web Browser Main Page* comes up, with the Port Access page displayed:

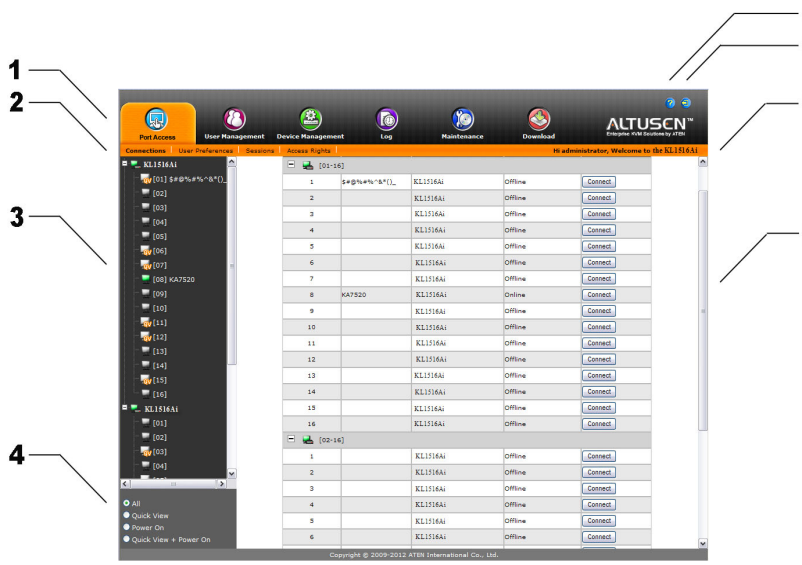

Note: The screen depicts an Administrator's page. Depending on a user's type and permissions, not all of these elements appear.

Page Components

The web page screen components are described in the table, below:

No.	Item	Description
1	Tab Bar	The tab bar contains the KL1508Ai / KL1516Ai main operation categories. The items that appear in the tab bar are determined by the user's type, and the authorization options that were selected when the user's account was created.
2	Menu Bar	The menu bar contains operational sub-categories that pertain to the item selected in the tab bar. The items that appear in the menu bar are determined by the user's type, and the authorization options that were selected when the user's account was created.
3	Sidebar	The Sidebar provides a tree view listing of ports that relate to the various tab bar and menu bar selections. Clicking a node in the Sidebar brings up a page with the details that are relevant to it.
4	Filter	The filter section at the bottom of the Sidebar lets you expand or narrow the scope of the ports that appear in the Sidebar tree, as follows: ◆ *All* – Lists all of the ports on the installation ◆ *Quick View* – Lists only the ports that have been selected as Quick View ports ◆ *Power On* – Lists only the ports that have their attached devices powered on ◆ *Quick View + Power On* – Lists only that ports that have been selected as Quick View ports and that have their attached devices turned on.
5	Help	Help provides information regarding the switch's current firmware version.
6	Logout	Click this button to log out of your KL1508Ai / KL1516Ai session.
7	Welcome Message	If this function is enabled (see *Welcome Message**, page 108), a welcome message displays here.
8	Interactive Display Panel	This is your main work area. The screens that appear reflect your menu choices and Sidebar node selection.

The Tab Bar

The number and type of icons that appear on the Tab Bar at the top of the page are determined by the user's type (Administrator or User) and the permissions assigned when the user's account was created. The functions associated with each of the icons are explained in the table below:

Icon	Function
	Port Access: The Port Access page is used to access and control the devices on the KL1508Ai / KL1516Ai installation. This page is available to all users.
	User Management: The User Management page is used to create and manage Users and Groups. It can also be used to assign devices to them. User Management is discussed on page 113. This tab is available to the Administrator, as well as users who have been given User Management permission. The tab doesn't appear for other users.
	Device Management: The Device Management page is used to configure and control the overall operation of the KL1508Ai / KL1516Ai. This page is available to the Administrator, as well as users who have been given Device Management permission. The tab doesn't appear for other users.
	Log: The Log page displays the contents of the log file. The Log page is discussed on page 145.
	Maintenance: The Maintenance page is used to install new firmware; backup and restore configuration and account information; ping network devices; and restore default values. The Maintenance page is discussed on page 147. This page is available to the Administrator and Users with *Maintenance* permission. The icon doesn't display on the page of ordinary users.
	Download: Users can click this icon to download AP versions of the Windows Client; the Java Client; and the Log Server. This page is available to all users. The programs that can be downloaded depend on the user's permissions.

There are two small icons at the extreme right of the page. Their functions are described in the table, below:

Icon	Function
	Click this icon to brings up a panel with information about the KVM Over the NET™ switch firmware version.
	Click this icon to log out and end your KVM Over the NET™ switch session.

The AP GUI Main Page

With WinClient AP, and Java Client AP access, once users log in (see *Logging In*, page 61), the *GUI Main Page* comes up:

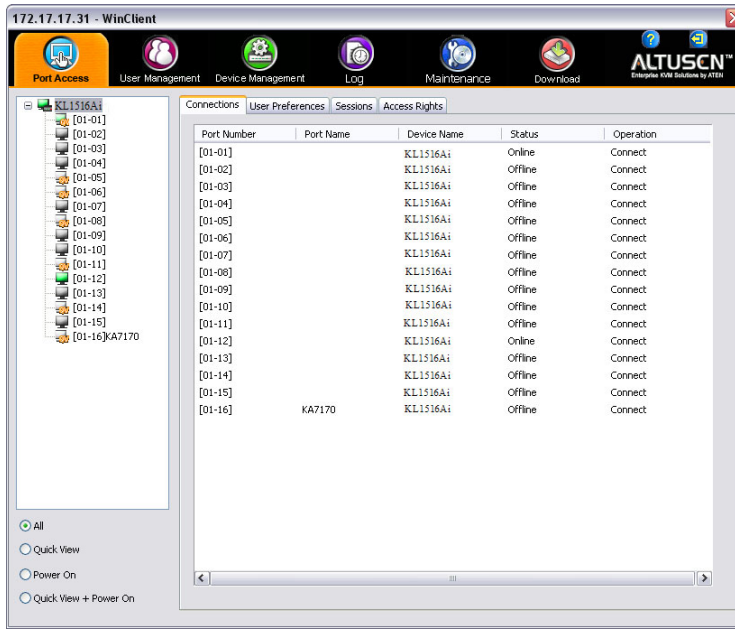

The GUI Main Page is similar to that of the Web Browser. The differences between them are as follows:

1. The AP GUI version doesn't have a menu bar below the tab bar; it has a series of tabs like a notebook, instead. Like the Web Browser interface, however, the makeup of the tabbed notebook changes depending on the items selected on the main Tab Bar and in the Sidebar.

2. There is a hidden *Control Panel* at the upper or lower center of the screen that becomes visible when you mouse over it. (The default is at the upper center of the screen.)

The Control Panel

WinClient Control Panel

Since the WinClient Control Panel contains the most complete functionality, this section describes the WinClient Control Panel. Although the Java Control Panel does not enable all of the features that this one does, the functions that they do share are the same, and you can refer to the information described here when using it.

The Control Panel is hidden at the upper or lower center of the screen (the default is at the lower center), and becomes visible when you mouse over it. The panel consists of three rows: an icon row at the top, and two text rows below it:

Note: The above image shows the complete Control Panel. The icons that appear can be user selected. See *Control Panel Configuration*, page 97, for details.

- By default, the upper text row shows the video resolution of the remote display. As the mouse pointer moves over the icons in the icon bar, however, the information in the upper text row changes to describe the icon's function. In addition, if a message from another user is entered in the message board, and you have not opened the message board in your session, the message will appear in the upper row.
- The lower row shows the IP address of the device you are accessing at the left of the row.

- Right clicking in the text row area brings up a menu-style version of the toolbar. In addition, it allows you to select options for the *Screen Mode*, *Zoom*, *Mouse Pointer* type, and *Mouse Sync Mode*. These functions are discussed in the sections that follow.

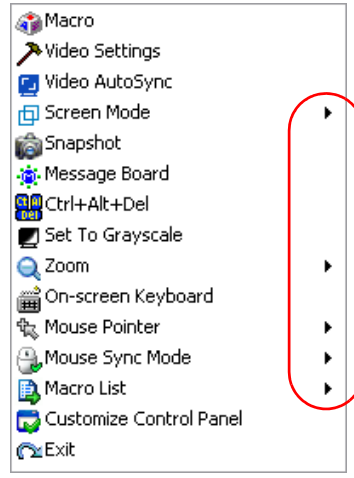

- To move the Control Panel to a different location on the screen, place the mouse pointer over the text row area, then click and drag.

WinClient Control Panel Functions

The Control Panel functions are described in the table below.

Icon	Function
	This is a toggle. Click to make the Control Panel persistent – i.e., it always displays on top of other screen elements. Click again to have it display normally.
	Click to bring up the Macros dialog box (see page 77 for details).
	Click to bring up the Video Options dialog box. Right-click to perform a quick Auto Sync (see *Video Settings*, page 86, for details).
	Click to perform a video and mouse autosync operation. It is the same as clicking the Auto-sync button in the *Video Options* dialog box (see *Video Settings*, page 86).
	Toggles the display between *Full Screen Mode* and *Windowed Mode*.
	Click to take a snapshot (screen capture) of the remote display. See *Snapshot*, page 98, for details on configuring the Snapshot parameters.
	Click to bring up the Message Board (see *The Message Board*, page 89).
	Click to send a Ctrl+Alt+Del signal to the remote system.
	Click to toggle the remote display between color and gray scale views.
	Click to zoom the remote display window. **Note:** This feature is only available in windowed mode (Full Screen Mode is off). See *Zoom*, page 91 for details.
	Click to bring up the on-screen keyboard (see *The On-Screen Keyboard*, page 92).
	Click to select the mouse pointer type. **Note:** This icon changes depending on which mouse pointer type is selected (see *Mouse Pointer Type*, page 94).

	Click to toggle Automatic or Manual mouse sync. ◆ When the selection is *Automatic*, a green √ appears on the icon. ◆ When the selection is *Manual*, a red X appears on the icon. See *Mouse DynaSync Mode*, page 95 for a complete explanation of this feature.
	Click to display a drop-down list of *User* macros in order to access and run macros more conveniently than using the Macros dialog box (see the *Macros* icon in the table above, and the *Macros* section on page 77).
	Click to bring up the Control Panel Configuration dialog box. See *Control Panel Configuration*, page 97, for details on configuring the Control Panel.
	Click to exit the viewer. ◆ Exiting from a Browser Viewer session brings you back to the web browser Main Page. ◆ Exiting from a WinClient AP session brings you back to the login dialog box. ◆ Exiting from a Java Client AP session brings you back to the login dialog box.
	These icons show the Num Lock, Caps Lock, and Scroll Lock status of the remote computer. ◆ When the lock state is *On*, the LED is bright green and the lock hasp is closed. ◆ When the lock state is *Off*, the LED is dull green and the lock hasp is open. Click on the icon to toggle the status. **Note:** These icons and your local keyboard icons are in sync. Clicking an icon causes the corresponding LED on your keyboard to change accordingly. Likewise, pressing a Lock key on your keyboard causes the icon's color to change accordingly.

Macros

The Macros icon provides access to two functions found in the Macros dialog box: Hotkeys and User Macros. Each of these functions is described in the following sections.

Hotkeys

Various actions related to manipulating the remote server can be accomplished with hotkeys. The *Hotkey Setup* utility (accessed by clicking this icon), lets you configure which hotkeys perform the actions.

The hotkeys that invoke an action are shown to the right of its name. Use the checkbox to the left of an action's name to enable or disable its hotkey.

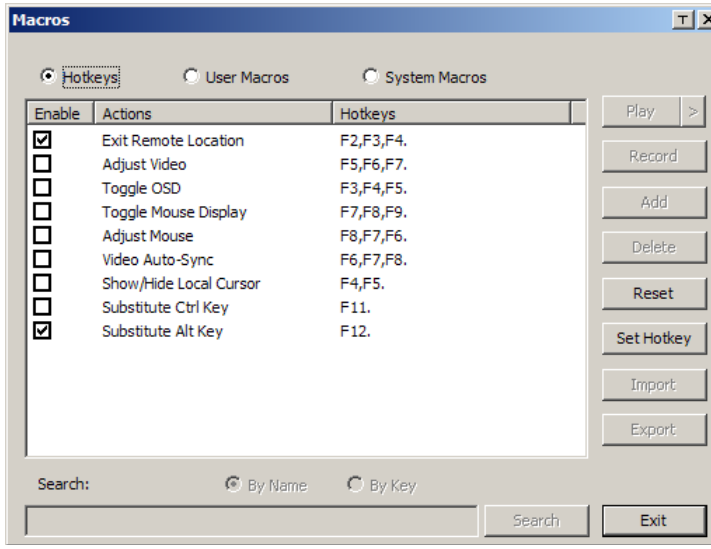

To change the hotkey for an action, do the following:

1. Highlight the *Action*, then click **Set Hotkey**.
2. Press your selected Function keys (one at a time). The key names appear in the *Hotkeys* field as you press them.
   - You can use the same function keys for more than one action, as long as the key sequence is not the same.
   - To cancel setting a hotkey value, click **Cancel**; to clear an action's Hotkeys field, click **Clear**.
3. When you have finished keying in your sequence, click **Save**.

To reset all the hotkeys to their default values, click **Reset**.

An explanation of the Hotkey actions is given in the table below:

Action	Explanation
Exit Remote Location	Breaks the connection to the KL1508Ai / KL1516Ai and returns you to local client computer operation. This is equivalent to clicking the *Exit* icon on the Control Panel. The default keys are F2, F3, F4.
Adjust Video	Brings up the *Video Settings* dialog box. This is equivalent to clicking the *Video Settings* icon on the Control Panel. The default keys are F5, F6, F7.
Toggle OSD	Toggles the OSD Control Panel Off and On. The default keys are F3, F4, F5.
Toggle Mouse Display	If you find the display of the two mouse pointers (local and remote) to be confusing or annoying, you can use this function to shrink the non-functioning pointer down to a barely noticeable circle, which can be ignored. Since this function is a toggle, use the hotkeys again to bring the mouse display back to its original configuration. This is equivalent to selecting the *Single* pointer type from the *Mouse Pointer* icon on the Control Panel. The default keys are F7, F8, F9. **Note:** The Java Control Panel does not have this feature.
Adjust Mouse	This synchronizes the local and remote mouse movements. The default keys are F6, F7, F8.
Video Autosync	This combination performs an auto-sync operation. It is equivalent to clicking the *Video Autosync* icon on the Control Panel. The default keys are F8, F7, F6.
Show/Hide Local Cursor	Toggles the display of your local mouse pointer off and on. This is equivalent to selecting the *Null* pointer type from the *Mouse Pointer* icon on the Control Panel. The default keys are F4,F5.
Substitute Ctrl key	If your local client computer captures Ctrl key combinations, preventing them from being sent to the remote server, you can implement their effects on the remote server by specifying a function key to substitute for the Ctrl key. If you substitute the F11 key, for example, pressing [F11 + 5] would appear to the remote server as [Ctrl + 5]. The default key is F11.
Substitute Alt key	Although all other keyboard input is captured and sent to the KL1508Ai / KL1516Ai switch, [Alt + Tab] and [Ctrl + Alt + Del] work on your local client computer. In order to implement their effects on the remote server, another key may be substituted for the Alt key. If you substitute the F12 key, for example, you would use [F12 + Tab] and [Ctrl + F12 + Del]. The default key is F12.

User Macros

User Macros are created to perform specific actions on the remote server. To create the macro, do the following:

1. Select *User Macros*, then click **Add**.

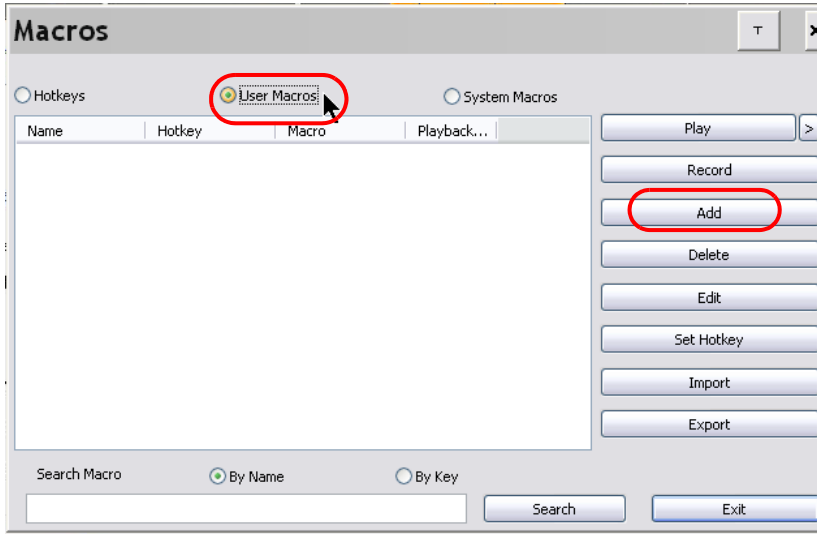

2. In the dialog box that comes up, replace the “NewMacro” text with a name of your choice for the macro:

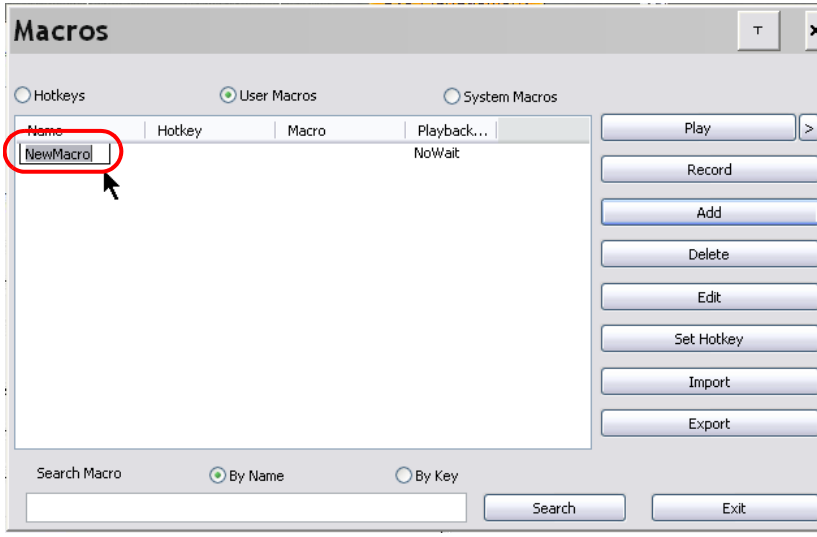

3. Click **Record**.

   The dialog box disappears, and a small panel appears at the top left of the screen:

4. Press the keys for the macro.
   - To pause macro recording, click **Pause**. To resume, click **Pause** again.
   - Clicking **Show** brings up a dialog box that lists each keystroke that you make, together with the amount of time each one takes:

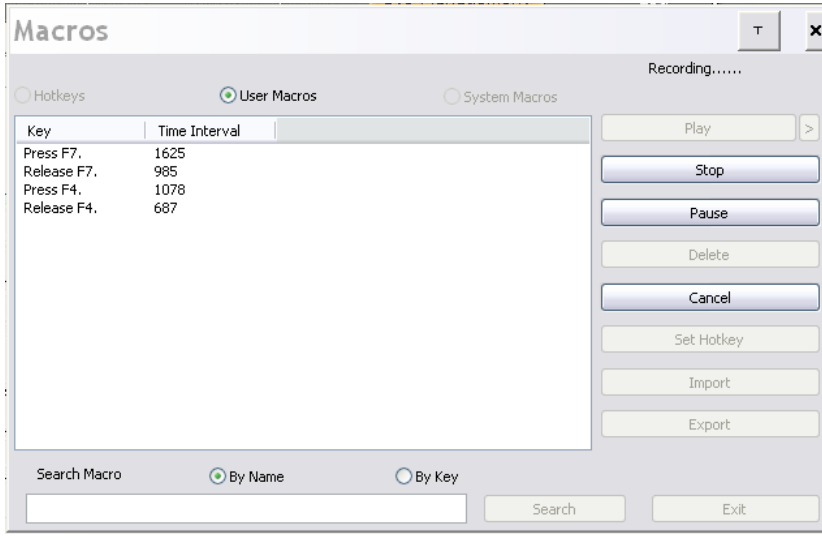

   - Clicking **Cancel** cancels all keystrokes.
   - When you have finished, click **Stop**. (This is the equivalent of clicking *Done* in Step 5.)

Note: 1. Case is not considered – typing **A** or **a** has the same effect.

2. When recording the macro the focus must be on the remote screen. It cannot be in the macro dialog box.

3. Only the default keyboard characters may be used. Alternate characters cannot be used. For example, if the keyboard is Traditional Chinese and default character is **A** the alternate Chinese character obtained via keyboard switching is not recorded.

5. If you haven't brought up the Show dialog, click **Done** when you have finished recording your macro. You return to the Macros dialog box with your macro key presses displayed in the Macro column:

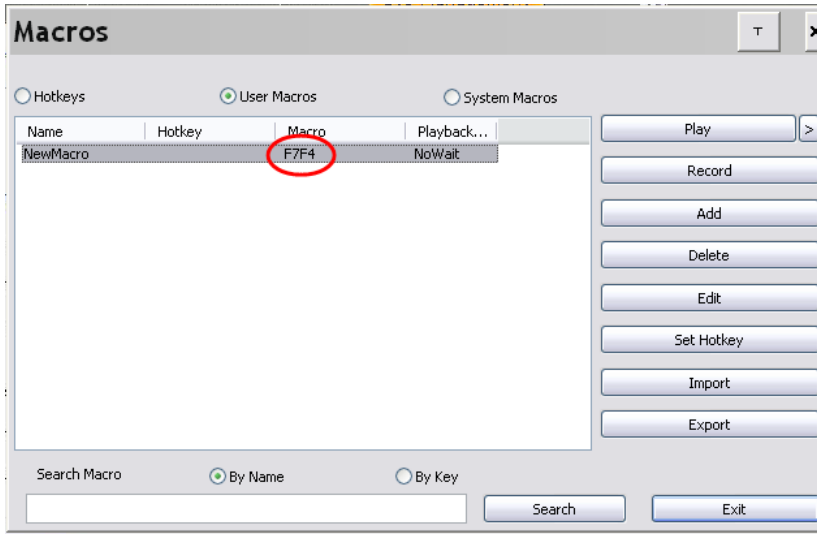

6. If you want to change any of the keystrokes, select the macro and click **Edit**. This brings up a dialog box similar to the one for Show. You can change the content of your keystrokes, change their order, etc.

7. Repeat the procedure for any other macros you wish to create.

After creating your macros, you can run them in any of three ways:

1. By using the hotkey (if one was assigned).
2. By opening the Macro List on the Control Panel and clicking the one you want (see page 76).
3. By opening this (Macros) dialog box and clicking **Play**.

If you run the macro from this dialog box, you have the option of specifying how the macro runs.

- If you choose *Play Without Wait*, the macro runs the keypresses one after another with no time delay between them.
- If you choose *Play With Time Control*, the macro waits for the amount of time between key presses that you took when you created it. Click on the arrow next to *Play* to make your choice.
- If you click *Play* without opening the list, the macro runs with the default choice (*NoWait* or *TimeCtrl*), which is shown in the *Playback* column.

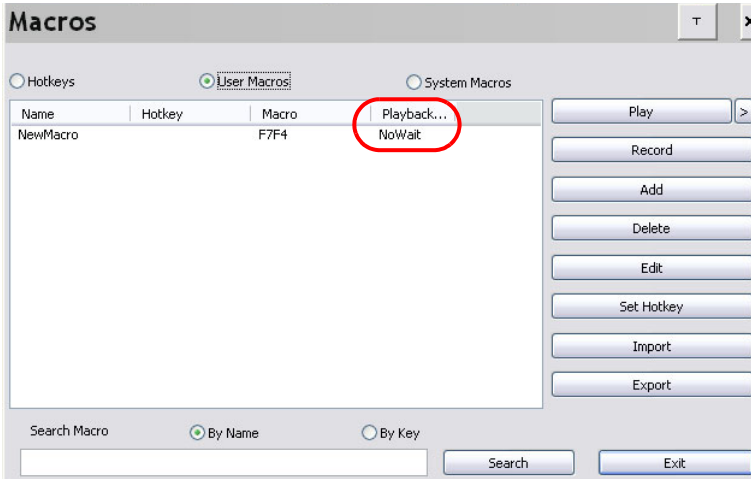

You can change the default choice by clicking on the current choice (*NoWait* in the screenshot above), and selecting the alternate choice.

Note: 1. Information about the Search function is given on page 83.

2. User Macros are stored on the Local Client computer of each user. Therefore, there is no limitation on the of number of macros, the size of the macro names, or makeup of the hotkey combinations that invoke them

■ Search

Search, at the bottom of the dialog box, lets you filter the list of macros that appear in the large upper panel for you to play or edit. Click a radio button to choose whether you want to search by name or by key; key in a string for the search; then click **Search**. All instances that match your search string appear in the upper panel.

System Macros

System Macros are used to create exit macros for when you close a session. For example, as an added measure of security, you could create a macro that sends the Winkey-L combination which would cause the remote server's log in page to come up the next time the device was accessed. To create the macro, do the following:

1. Select *System Macros*, then click **Add**.

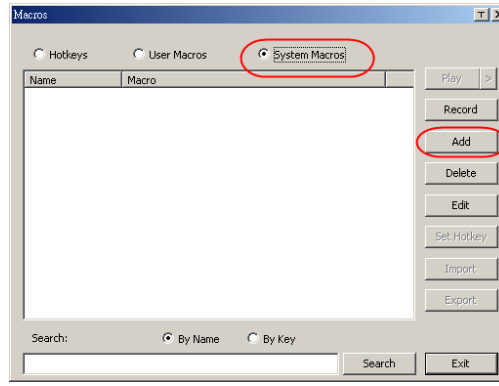

2. In the dialog box that comes up, replace the "New Macro" text with a name of your choice for the macro:

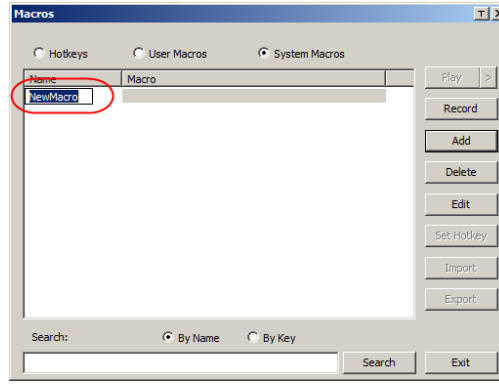

3. Click **Record**.

The dialog box disappears, and a small panel appears at the top left of the screen:

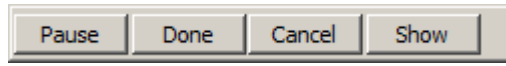

4. Press the keys for the macro.
   - To pause macro recording, click **Pause**. To resume, click **Pause** again.
   - Clicking **Show** brings up a dialog box that lists each keystroke that you make, together with the amount of time each one takes.

Note: 1. When recording the macro the focus must be on the remote screen. It cannot be in the macro dialog box.

2. Case is not considered – typing **A** or **a** has the same effect. Only the default keyboard characters may be used. Alternate characters cannot be used. For example, if the keyboard is Traditional Chinese and default character is **A** the alternate Chinese character obtained via keyboard switching is not recorded.

5. If you haven't brought up the Show dialog, click **Done** when you have finished recording your macro. You return to the Macros dialog box with your system macro key presses displayed in the Macro column:

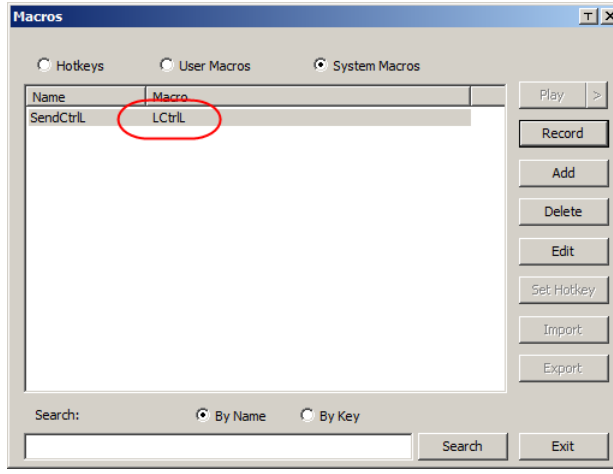

6. If you want to change any of the keystrokes, select the macro and click **Edit**. This brings up a dialog box similar to the one for Show. You can change the content of your keystrokes, change their order, etc.
7. Repeat the procedure for any other macros you wish to create.

Once the system macros have been created, they are available for use on a port-by-port basis. They get selected on a port's *Port Configuration* → *Port Properties* page (see *Port Configuration*, page 139 for details).

Note: 1. Information about the Search function is given on page 83.

2. You can choose only one system macro per port.
3. Systems macros are stored on the switch, therefore macro names may not exceed 64 Bytes; hotkey combinations may not exceed 256 Bytes. (Each key usually takes 3–5 Bytes.)

Video Settings

Clicking the *Hammer* icon on the Control Panel brings up the *Video Settings* dialog box. The options in this dialog box allow you to adjust the placement and picture quality of the remote screen on your monitor:

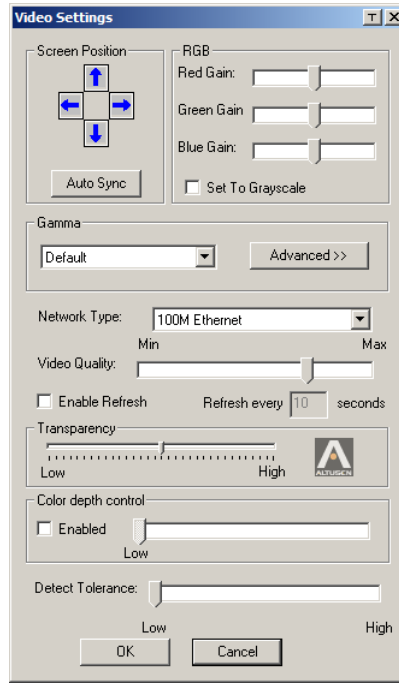

The meanings of the video adjustment options are given in the table below:

Options	Usage
Screen Position	Adjust the horizontal and vertical position of the remote server window by Clicking the Arrow buttons.
Auto-Sync	Click Auto-Sync to have the vertical and horizontal offset values of the remote screen detected and automatically synchronized with the local screen. **Note:** 1. If the local and remote mouse pointers are out of sync, in most cases, performing this function will bring them back into sync. 2. This function works best with a bright screen. 3. If you are not satisfied with the results, use the Screen Position arrows to position the remote display manually.

Options	Usage
RGB	Drag the slider bars to adjust the RGB (Red, Green, Blue) values. When an RGB value is increased, the RGB component of the image is correspondingly increased. If you enable *Set to Grayscale*, the remote video display is changed to grayscale.
Gamma	This section allows you to adjust the video display's gamma level. This function is discussed in detail in the next section, *Gamma Adjustment*.
Network Type	Select the type of internet connection that the local client computer uses. The switch will use that selection to automatically adjust the *Video Quality* and *Detect Tolerance* settings to optimize the quality of the video display. Since network conditions vary, if none of the pre-set choices seem to work well, you can select *Customize* and use the Video Quality and Detect Tolerance slider bars to adjust the settings to suit your conditions.
Video Quality	Drag the slider bar to adjust the overall Video Quality. The larger the value, the clearer the picture and the more video data goes through the network. Depending on the network bandwidth, a high value may adversely effect response time.
Enable Refresh	The KL1508Ai / KL1516Ai can redraw the screen every 1 to 99 seconds, eliminating unwanted artifacts from the screen. Select **Enable Refresh** and enter a number from 1 through 99. The KL1508Ai / KL1516Ai will redraw the screen at the interval you specify. This feature is disabled by default. Click to put a check mark in the box next to *Enable Refresh* to enable this feature. **Note:** 1. The switch starts counting the time interval when mouse movement stops. 2. Enabling this feature increases the volume of video data transmitted over the network. The lower the number specified, the more often the video data is transmitted. Setting too low a value may adversely affect overall operating responsiveness.
Transparency	Adjusts the transparency of the toolbar that comes up when the OSD hotkey ([Scroll Lock] [Scroll Lock], for example), is invoked. Slide the bar until the display in the example window is to your liking.
Color Depth Control	This setting determines the richness of the video display by adjusting the amount of color information.
Detect Tolerance	This setting also relates to video quality. It governs detecting or ignoring pixel changes. A high setting can result in a lower quality display due to less data transfer. A lower setting will result in better video quality, but setting the threshold too low may allow too much data to be transferred, negatively impacting network performance.

Gamma Adjustment

If it is necessary to correct the gamma level for the remote video display, use the *Gamma* function of the Video Adjustment dialog box.

- Under *Basic* configuration, there are ten preset and four user-defined levels to choose from. Drop down the list box and choose the most suitable one.
- For greater control, clicking the *Advanced* button brings up the following dialog box:

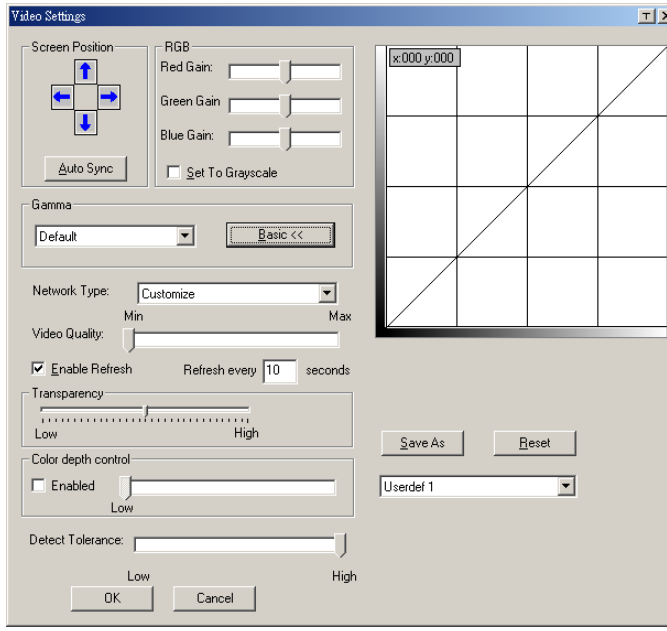

- Click and drag the diagonal line at as many points as you wish to achieve the display output you desire.
- Click **Save As** to save up to four user-defined configurations derived from this method. Saved configurations can be recalled from the list box at a future time.
- Click **Reset** to abandon any changes and return the gamma line to its original diagonal position.
- Click **OK** to save your changes and close the dialog box.
- Click **Cancel** to abandon your changes and close the dialog box.

Note: For best results, change the gamma while viewing a remote server.

The Message Board

The KL1508Ai / KL1516Ai supports multiple user logins, which may cause access conflicts. To alleviate the problem, a message board has been provided, which allows users to communicate with each other:

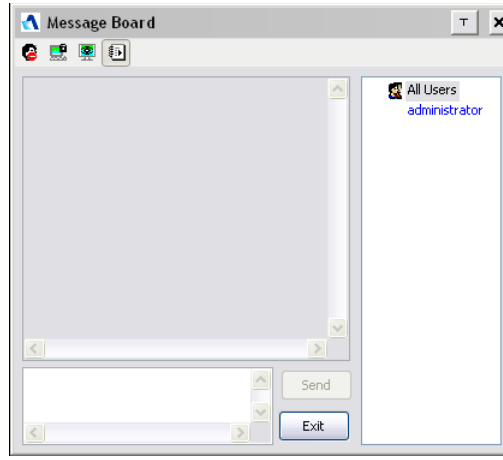

Button Bar

The buttons on the Button Bar are toggles. Their actions are described in the table below:

Button	Action
	Enable/Disable Chat. When disabled, messages posted to the board are not displayed. The button is shadowed when Chat is disabled. The icon displays next to the user's name in the User List panel when the user has disabled Chat.
	Occupy/Release Keyboard/Video/Mouse. When you Occupy the KVM, other users cannot see the video, and cannot input keyboard or mouse data. The button is shadowed when the KVM is occupied. The icon displays next to the user's name in the User List panel when the user has occupied the KVM.
	Occupy/Release Keyboard/Mouse. When you Occupy the KM, other users can see the video, but cannot input keyboard or mouse data. The button is shadowed when the KM is occupied. The icon displays next to the user's name in the User List panel when the user has occupied the KM.
	Show/Hide User List. When you Hide the User List, the User List panel closes. The button is shadowed when the User List is open.

Message Display Panel

Messages that users post to the board - as well as system messages - display in this panel. If you disable Chat, however, messages that get posted to the board won't appear.

Compose Panel

Key in the messages that you want to post to the board in this panel. Click **Send**, or press [**Enter**] to post the message to the board.

User List Panel

The names of all the logged in users are listed in this panel.

- Your name appears in blue; other users' names appear in black.
- By default, messages are posted to all users. To post a message to one individual user, select the user's name before sending your message.
- If a user's name is selected, and you want to post a message to all users, select All Users before sending your message.
- If a user has disabled Chat, its icon displays before the user's name to indicate so.
- If a user has occupied the KVM or the KM, its icon displays before the user's name to indicate so.

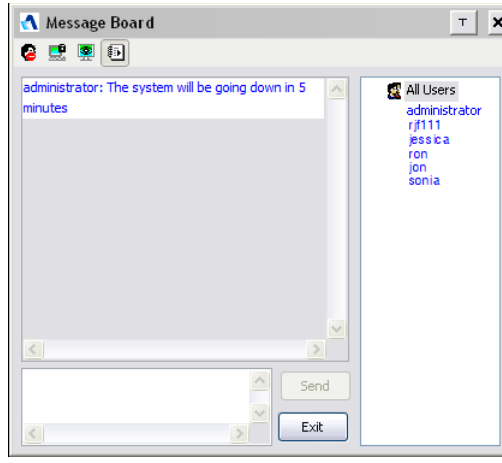

Zoom

The Zoom icon controls the zoom factor for the remote view window. Settings are as follows:

Setting	Description
100%	Sizes and displays the remote view window at 100%.
75%	Sizes and displays the remote view window at 75%.
50%	Sizes and displays the remote view window at 50%.
25%	Sizes and displays the remote view window at 25%.
1:1	Sizes and displays the remote view window at 100%. The difference between this setting and the 100% setting is that when the remote view window is resized its contents don't resize – they remain at the size they were. To see any objects that are outside of the viewing area move the mouse to the window edge, to have the screen scroll.

The On-Screen Keyboard

The KL1508Ai / KL1516Ai supports an on-screen keyboard, available in multiple languages, with all the standard keys for each supported language. Click this icon to pop up the on-screen keyboard:

One of the major advantages of the on-screen keyboard is that if the keyboard languages of the remote and local systems aren't the same, you don't have to change the configuration settings for either system. Just bring up the on-screen keyboard; select the language used by the server you are accessing; and use the on-screen keyboard to communicate with it.

Note: You must use your mouse to click on the keys. You cannot use your actual keyboard.

Changing Languages

To change languages, do the following:

1. Click the down arrow next to the currently selected language, to drop down the language list.

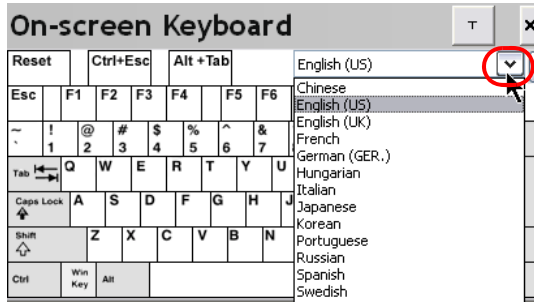

2. Select the new language from the list.

Expanded Keyboard

To display/hide the expanded keyboard keys, click the arrow to the right of the language list arrow.

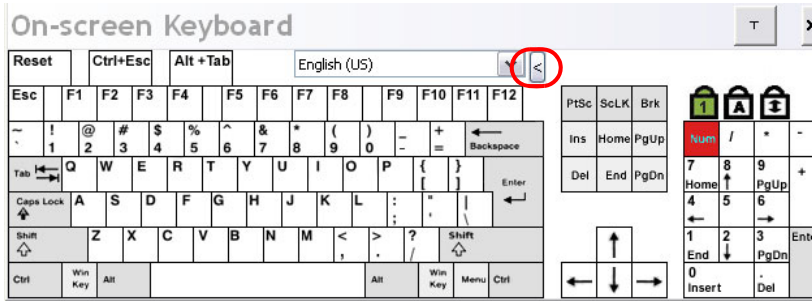

Mouse Pointer Type

The KL1508Ai / KL1516Ai offer a number of mouse pointer options when working in the remote display. Click this icon to select from the available choices:

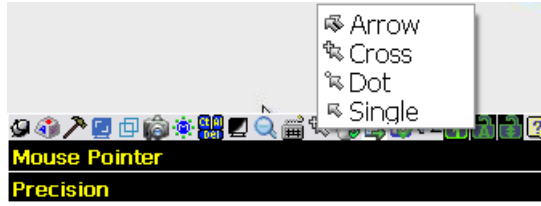

Note: 1. Before accessing a port, only Dual and Crosshairs are available for the Windows Viewers. Once the port is accessed, all four pointers are available.

2. The Dot pointer is not available with the Java Applet Viewer or the Java Client AP.

3. Selecting the Dot pointer has the same effect as the *Toggle mouse display* hotkey function (see *Toggle Mouse Display*, page 78 for details).

4. The icon on the Control Panel changes to match your choice.

Mouse DynaSync Mode

Synchronization of the local and remote mouse pointers is accomplished either automatically or manually.

Automatic Mouse Synchronization (DynaSync)

Mouse DynaSync provides automatic locked-in synching of the remote and local mouse pointers – eliminating the need to constantly resync the two movements.

Note: This feature is only available for Windows and Mac systems (G4 and higher) whose adapter attribute OS setting is configured for Win or Mac, which are connected to the switch with one of the following Adapter Cables: KA7166, KA7168, KA7169, KA7170 or KA9170.

All other configurations must use manual mouse synchronization (described in the next section).

The icon on the Control Panel indicates the synchronization mode status as follows:

Icon	Function
	This icon displays in gray to indicate that Mouse DynaSync is not available – you must use manual synching procedures. This is the default setting for all KVM Adapters other than the KA7166, KA7168, KA7169, KA7170 and KA9170.
	The green check mark on this icon indicates that Mouse DynaSync is available and is **enabled**. This is the default setting when Mouse DynaSync is available. (See the Note, above.)
	The red X on this icon indicates that Mouse DynaSync is available but is **not enabled**.

When *Mouse DynaSync* is available, clicking the icon toggles its status between enabled and /disabled. If you choose to disable Mouse DynaSync mode, you must use the manual synching procedures described under *Manual Mouse Synchronization*, page 96.

Mac and Linux Considerations

- For Mac OS versions 10.4.11 and higher, there is a second DynaSync setting to choose from. If the default Mouse DynaSync result is not satisfactory, try the **Mac 2** setting. To select Mac 2, right click in the text area of the Control Panel and select *Mouse Sync Mode* → *Automatic for Mac 2*:

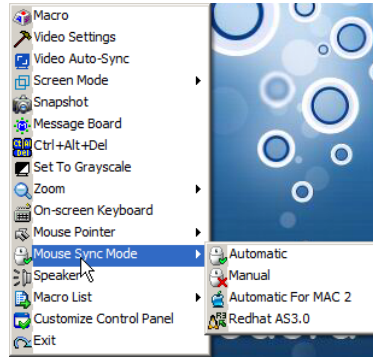

- Linux doesn't support DynaSync Mode, but there is a setting on the Mouse Sync Mode menu for Redhat AS3.0 systems. If you are using a USB Adapter Cable (see the Note on the previous page), with an AS3.0 system and the default mouse synchronization is not satisfactory, you can try the Redhat AS3.0 setting. In either case, you must perform the manual mouse synchronization procedures described in the next section.

Manual Mouse Synchronization

If the local mouse pointer goes out of sync with the remote system's mouse pointer there are a number of methods to bring them back into sync:

1. Perform a video and mouse auto sync by clicking the *Video Settings* icon on the Control Panel (see page 86).
2. Perform an *Auto Sync* with the Video Adjustment function (see *Video Settings*, page 86, for details).
3. Invoke the *Adjust Mouse* function with the *Adjust Mouse* hotkeys (see *Adjust Mouse*, page 78, for details).
4. Move the pointer into all 4 corners of the screen (in any order).
5. Drag the Control Panel to a different position on the screen.
6. Set the mouse speed and acceleration for each problematic server attached to the switch. See *Additional Mouse Synchronization Procedures*, page 207, for instructions.

Control Panel Configuration

Clicking the *Control Panel* icon brings up a dialog box that allows you to configure the items that appear on the Control Panel, as well as its graphical settings:

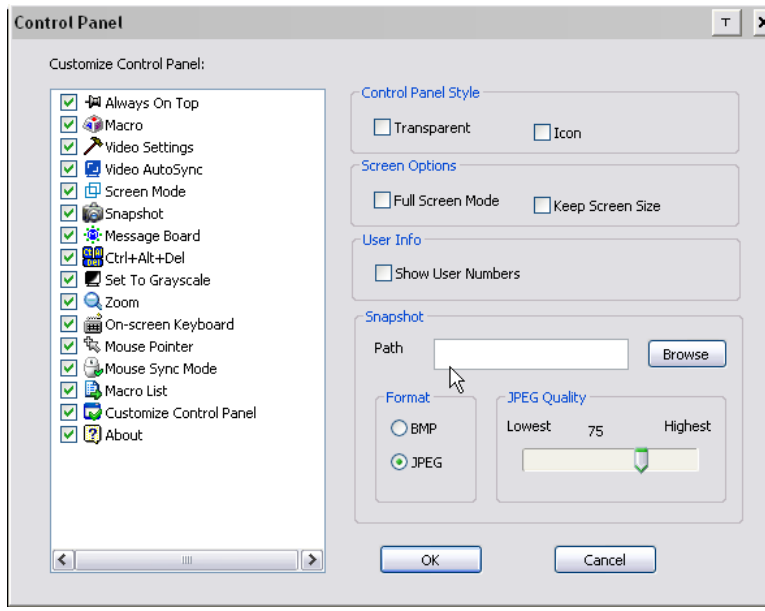

The organization of the dialog box is described in the table, below:

Item	Description
Customize Control Panel	Allows you to select which icons display in the Control Panel. Check the ones you want to see, uncheck the ones you don't want.
Control Panel Style	◆ Enabling *Transparent* makes the Control Panel semi-transparent, so that you can see through it to the display underneath. ◆ Enabling *Icon* causes the Control Panel to display as an icon until you mouse over it, when the full panel then comes up.

Item	Description

Screen Options	◆ If *Full Screen Mode* is enabled, the remote display fills the entire screen.
	◆ If *Full Screen Mode* is not enabled, the remote display appears as a window on the local desktop. If the remote screen is larger than what is able to fit in the window, move the mouse pointer to the screen border that is closest to the area you want to view and the screen will scroll.
	◆ If *Keep Screen Size* is enabled, the remote screen is not resized.
	  ◆ If the remote resolution is smaller than that of the local monitor, its display appears like a window centered on the screen.
	  ◆ If the remote resolution is larger than that of the local monitor, its display is centered on the screen. To access the areas that are off screen, move the mouse to the corner of the screen that is closest to the area you want to view and the screen will scroll.
	◆ If *Keep Screen Size* is not enabled, the remote screen is resized to fit the local monitor's resolution.

User Info	If *User Info* is enabled, the total number of users displays on the bottom row center of the Control Panel.
Snapshot	These settings let the user configure the KL1508Ai / KL1516Ai's screen capture parameters (see the *Snapshot* description under *WinClient Control Panel Functions*, page 75): ◆ Path lets you select a directory where the captured screens get saved to. Click **Browse**; navigate to the directory of your choice; then click **OK**. If you don't specify a directory here, the snapshot is saved to your desktop. ◆ Click a radio button to choose whether you want the captured screen to be saved as a BMP or a JPEG (JPG) file. ◆ If you choose JPEG, you can select the quality of the captured file with the slider bar. The higher the quality, the better looking the image, but the larger the file size.

The Java Control Panel

The Java Client AP Control Panel is similar to the one used by the WinClient:

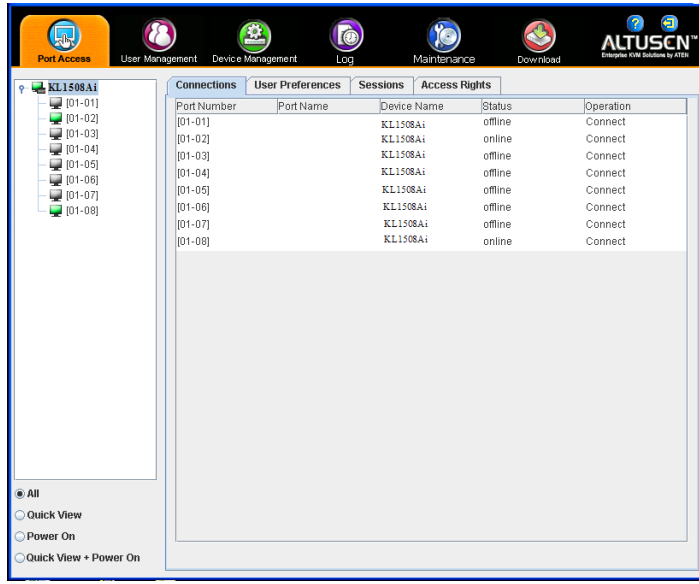

The major differences between them are:

- In the Macros dialog box, *Toggle Mouse Display* is not available.
- The *Dot* mouse pointer type is not available.
- In the Message Board, there is no *Show/Hide* button to show or hide the user list. This function is achieved by clicking the arrows at the top of the bar that separates the User List panel from the Main panel.
- The Control Panel *Lock LED* icons are not in sync with your keyboard. When you first connect, the LED display may not be accurate. To be sure, click on the LED icons to set them.
- In *Control Panel Configuration*, the BMP Snapshot format has been replaced by PNG.

This Page Intentionally Left Blank

Chapter 9
Port Access

Overview

When you log in to the switch the *Port Access* page comes up with the KL1508Ai / KL1516Ai's KVM *Connections* page displayed.

Browser GUI

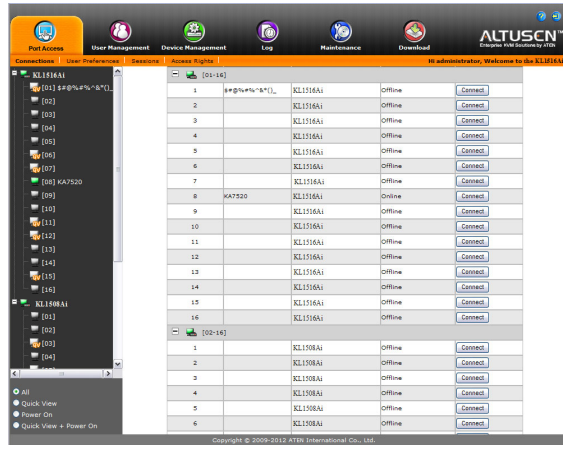

AP GUI

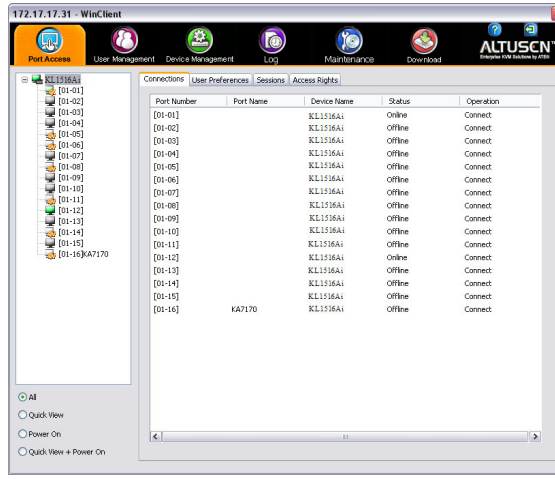

The Connections page is organized into several main areas. All the devices and ports that a user is permitted to access are listed in the Sidebar at the left of the page. After selecting a device or port in the Sidebar, clicking entries on the menu bar (Browser GUI) or tab bar (AP GUI) opens information and configuration pages related to the item selected in the Sidebar.

The Sidebar

All KVM switches are listed in a tree structure in the Sidebar at the left of the screen:

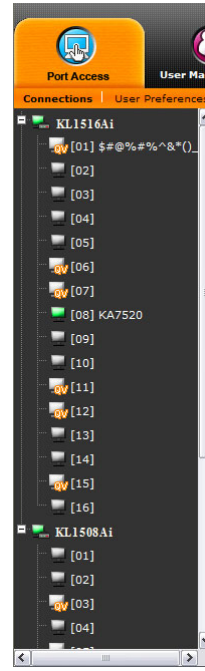

The Sidebar Tree Structure

- Users are only allowed to see the devices and ports that they have access permission for.
- Ports and chained station devices can be nested under their first station devices.

  Click the + in front of a device to expand the tree and see the ports/outlets nested underneath it. Click the - to collapse the tree and hide the nested ports/outlets.
- A port's ID number is displayed in brackets next to its icon.
- Switches and ports that are on line have their monitor screen icons in Green; the monitor screens are Gray for devices and ports that are offline.
- Outlets that are *On* have their icons in Amber; the icons are Gray for outlets that are *Off*.

- To access and operate a port, double click its icon. Port operation details are discussed in Chapter 16, *Port Operation*.

View Filter

At the bottom of the sidebar are the viewing filter options which allow you to control the number and type of ports that display in the Sidebar:

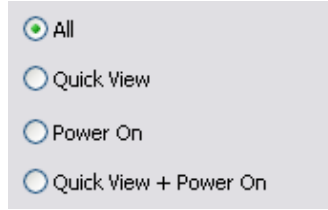

The meanings of the choices are explained in the following table:

Choices	Explanation
ALL	Lists all of the ports on the installation.
QUICK VIEW	Lists only the ports that have been selected as Quick View Ports (see *Set Quick View Ports*, page 143).
POWER ON	Lists only the ports that have attached computers Powered On.
QUICK VIEW + POWER ON	Lists only the ports that have been selected as Quick View Ports (see *Set Quick View Ports*, page 143), and that have their attached computers Powered On.

Connections

For the KL1508Ai / KL1516Ai, the *Connections* page displays port status information at the device level, and port connection configuration options at the port level.

Device Level

When a KL1508Ai / KL1516Ai is selected in the Sidebar, the Connections page displays a list of ports for the device that the user is authorized to access or view.

Port Number	Port Name	Device Name	Status	Operation
[01-16]				
1	PMSSPS	KL1516Ai	Offline	Connect
2		KL1516Ai	Offline	Connect
3		KL1516Ai	Offline	Connect
4		KL1516Ai	Offline	Connect
5		KL1516Ai	Offline	Connect
6		KL1516Ai	Offline	Connect
7		KL1516Ai	Offline	Connect
8	KA7520	KL1516Ai	Online	Connect
9		KL1516Ai	Offline	Connect
10		KL1516Ai	Offline	Connect
11		KL1516Ai	Offline	Connect
12		KL1516Ai	Offline	Connect
13		KL1516Ai	Offline	Connect
14		KL1516Ai	Offline	Connect
15		KL1516Ai	Offline	Connect
16		KL1516Ai	Offline	Connect

The following attributes are listed for each device:

- Port Number – the port's number on the switch.
- Port Name – if a name has been assigned to a port it displays here.
- Device Name – if a name has been assigned to the switch it displays here.
- Status – the current status of the port – online, or offline.
- Operation – You can access any port from the main panel by clicking **Connect.**

Note: The sort order of the information displayed can be changed by clicking the column headings.

Port Level

When a port is selected in the Sidebar, the *Connections* page displays port connection configuration properties:

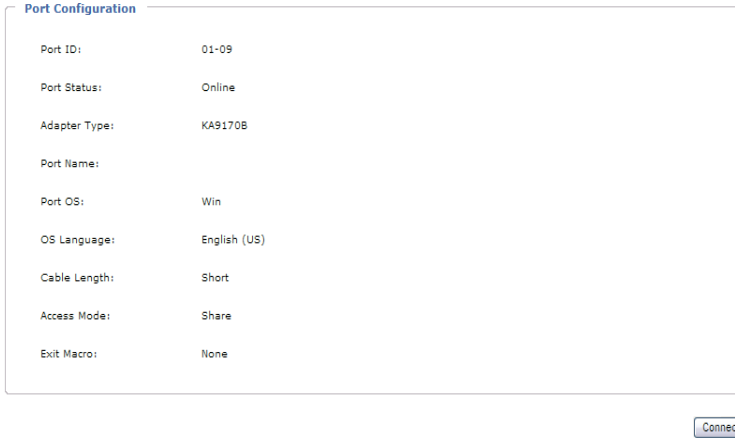

This page allows you to view the port's current configuration only. See *Port Configuration*, page 139, for full details about the properties and how to configure then.

Click the **Connect** button to view the port display via the KL1508Ai / KL1516Ai's built-in Win Viewer (when using Windows Internet Explorer), or Java Viewer (when using other web browsers).

User Preferences

The *User Preferences* page allows users to set up their own, individual, working environments. The switch stores a separate configuration record for each user profile, and sets up the working configuration according to the *Username* that was keyed into the Login dialog box:

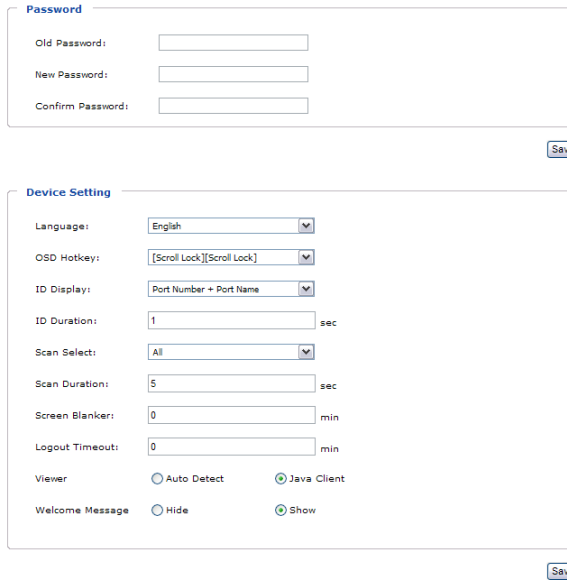

The page settings are explained in the following table:

Setting	Function
Changing a Password	◆ In the Browser GUI, to change a user's password, key in the old password and new password into their input boxes; key the new password into the *Confirm* input box, then click **Change Password** to apply the change. ◆ In the AP GUI version, click **Change Password**; key in the old password and new password into their input boxes; key the new password into the *Confirm* input box, then click **Save**.
Language	Selects the language that the interface displays in.
OSD Hotkey	Selects which Hotkey controls the OSD function: *[Scroll Lock]* by default. To select a different combination, click the arrow at the right of the box to drop down the list of choices.
ID Display	Selects how the Port ID is displayed: the Port Number alone (PORT NUMBER); the Port Name alone (PORT NAME); or the Port Number plus the Port Name (PORT NUMBER + PORT NAME). The default is PORT NUMBER + PORT NAME.

Setting	Function
ID Duration	Determines how long a Port ID displays on the monitor after a port change has taken place. You can choose an amount from 1—255 seconds. The default is 3 Seconds. A setting of 0 (zero) means the Port ID is always on.
Scan Duration	Determines how long the focus dwells on each port as it cycles through the selected ports in Auto Scan Mode (see *Auto Scanning*, page 171). Key in a value from 1—255 seconds. The default is 5 seconds; a setting of 0 disables the Scan function.
Screen Blanker	If there is no input from the console for the amount of time set with this function, the screen is blanked. Key in a value from 1—30 minutes. A setting of 0 disables this function. The default is 0 (disabled). **Note:** Although this function can be set from either the local console or a remote login, it only affects the local console monitor.
Logout Timeout	If there is no user input for the amount of time set with this function, the user is automatically logged out. A login is necessary before the KL1508Ai / KL1516Ai can be accessed again.
Viewer*	You can choose which viewer is used when accessing a server: ◆ **Auto Detect** will select the appropriate viewer based on the web browser used; WinClient for Windows Internet Explorer, Java Client for other web browsers (ex. Firefox). ◆ **Java Client** will open the Java based viewer regardless of the web browser being used.
Welcome Message*	You can choose to hide or show the welcome message displayed in the submenu bar. The default is disabled.
Save	Click **Save** to save any changes made to the User Preferences settings.

* This item is only available with the Browser version.

Sessions

The *Session* page lets the administrator and users with User Management permissions see at a glance which users are currently logged into the KL1508Ai / KL1516Ai, and provides information about each of their sessions.

Select	Username	IP	Login Time	Client	Category
	administrator	10.0.13.226	10:01:16	Browser	Admin

End Session Refresh

Note: 1. The Session page isn't available for ordinary users.

2. Users with User Management permissions can only see the sessions of ordinary users.

3. The sort order of the information displayed can be changed by clicking the column headings.

The meanings of the headings at the top of the page are fairly straightforward. The *IP* heading refers to the IP address that the user has logged in from; the *Login Time* and *Client* tell you when and how the user logged in, and the *Category* heading lists the type of user who has logged in: Admin (Administrator); Normal user (User)

This page also gives the administrator the option of forcing a user logout by selecting the user and clicking **End Session** at the bottom of the main panel.

Access Rights

Administrators use the *Access Rights* page to set user access and configuration rights for ports.

Note: The Access page only appears for those users with User Management permissions. It isn't available for other users.

Browser GUI Interface

If a port is chosen in the Sidebar, the Main panel looks similar to the one shown below:

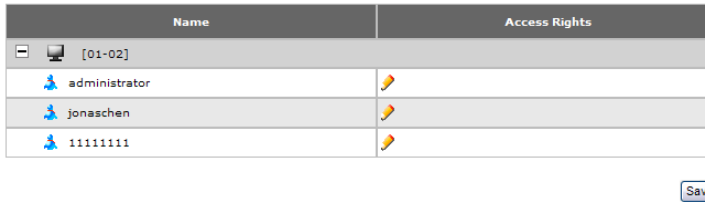

The main panel consists of two columns: *Name*, and *Access Rights*:

- *Name* lists all the users that have been created.
- *Access Rights* indicates the users who have access rights privileges. A check mark (√) indicates that the user has permission to make changes to the switch configuration settings (see Chapter 11, *Device Management*); an X means that the user is denied permission to make configuration changes. Click the icon to toggle permission between Full Access, View Only, and No Access.

AP GUI Interface

The AP GUI *Access Rights* page is similar to the Browser GUI version (see above), except that there is no checkmark icon in the Access column.

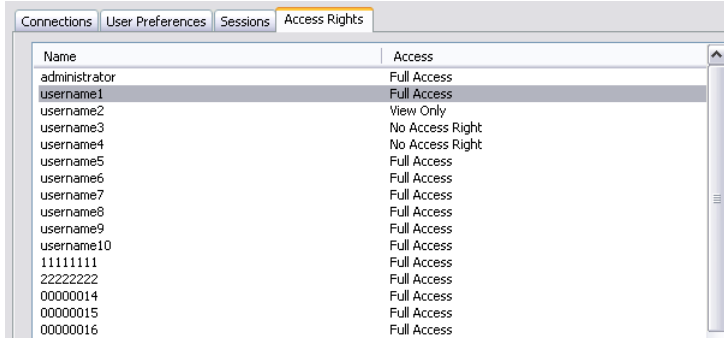

- Click the text in the *Access* column to toggle permission between Full Access, View Only, and No Access.

Saving Changes

Click the **Save** button at the lower right corner of the page to save any changes made on the Access page.

This Page Intentionally Left Blank

Chapter 10
User Management

Overview

When you select the *User Management* tab the screen comes up with the *Users* page displayed:

Browser GUI

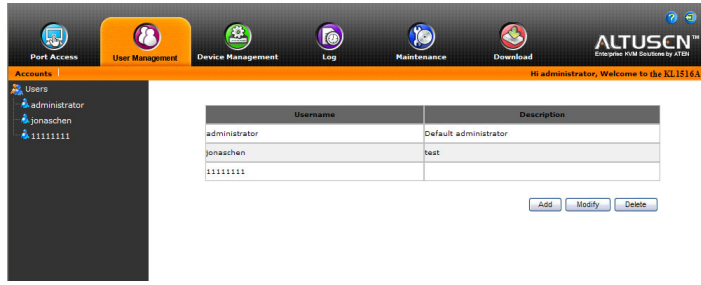

AP GUI

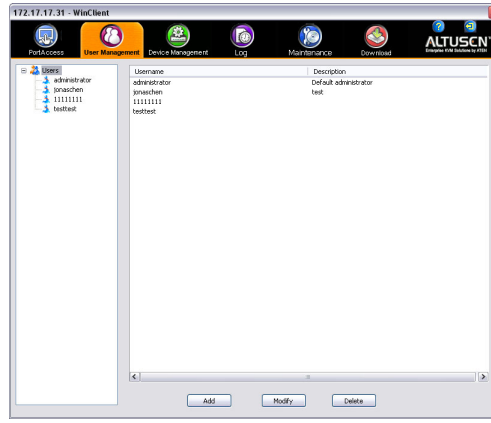

- Users appear in the panel at the left of the page. The large panel at the right provides more detailed information at-a-glance for each.
- The buttons below the main panel are used to manage users , as shown in the sections that follow.

Users

The KL1508Ai / KL1516Ai supports two types of user, as shown in the table, below:

User Type	Role
Administrator	Access and manage ports and devices. Manage Users, and Groups. Configure the overall installation. Configure personal working environment.
User	Access authorized ports and devices. Manage authorized ports and devices; configure personal working environment. **Note:** Users who have been given permission to do so, may also manage other users.

Adding Users

To add user, and assign user permissions, do the following:

1. Select *Users* on the menu bar (Browser GUI)

   – or –

   Select *Users* in the Sidebar (AP GUI).

2. To add a user, click **Add** at the bottom of the main panel. The User notebook opens, with the *User* tab selected:

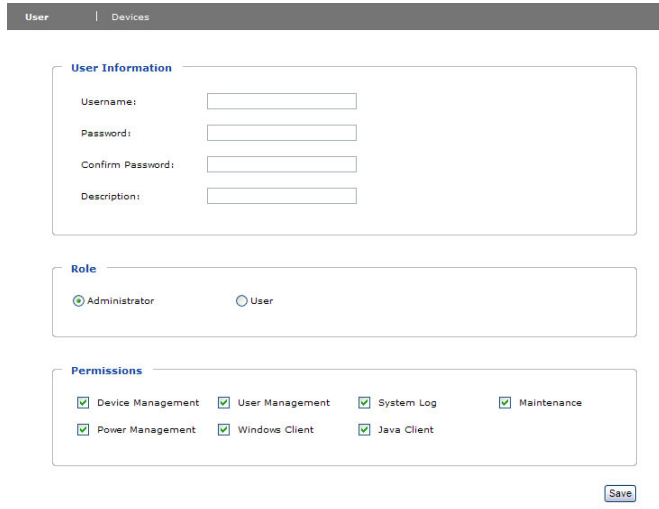

3. Enter the required information in the appropriate fields. A description of each of the fields is given in the table below:

Field	Description
Username	Enter a username with a minimum of 6 and maximum of 16 characters.
Password	Enter a password with a minimum of 6 and maximum of 16 characters. **Note:** Special characters ~!@#$%^&* are not supported.
Confirm Password	To be sure there is no mistake in the password, you are asked to enter it again. The two entries must match.
Description	Additional information about the user that you may wish to include.
Role	There are two categories: Administrator and User. There is no limitation on the number of accounts that can be created in each category. ◆ The Administrator is responsible for the overall installation configuration and maintenance; user management; and device and port assignments. The Administrator's permissions (see page 116) are automatically assigned by the system and cannot be altered. ◆ The default permissions for Users include the Win, Java, and SSH clients, but the permissions can be altered for each User by checking or unchecking any of the permissions checkboxes. **Note:** Users who have been given User Management privileges cannot access or configure Groups.

Field	Description
Permissions **Note:** For ordinary users, in addition to enabling *Device Management*, *Port Configuration*, and *Maintenance* permissions, the user must also be given those rights for each device and port that he will be allowed to manage. See *Device Assignment*, page 118 for details.	◆ Enabling *Device Management* allows a user to configure and control the settings for overall KL1508Ai / KL1516Ai operations (see *Device Management*, page 121). ◆ Enabling *User Management* allows a user to create, modify, and delete user and group accounts. ◆ Enabling *System Log* allows a user to access the system log (see *Log*, page 145). ◆ Enabling *Maintenance* allows a user to perform all the Maintenance operations available under the Maintenance tab (see , page 147). ◆ Enabling *Power Management* allows a user to download the PoN AP to link to a Power Over the Net™ login screen. (see the ATEN website for more information about the PN series of Power Distribution Units) ◆ Enabling *Windows Client* allows a user to download the Windows Client AP software, and access the KL1508Ai / KL1516Ai with it, in addition to (or instead of) the browser access method. ◆ Enabling *Java Client* allows a user to download the Java Client AP software, and access the KL1508Ai / KL1516Ai with it, in addition to (or instead of) the browser access method.

4. When your selections have been made click **Save**.
5. When the *Operation Succeeded* message appears, click **OK**.
6. Click **Users** in the Sidebar to return to the main screen. The new user appears in the Sidebar list and in the main panel, as well.
   - The Sidebar *Users* list can expand and collapse. If the list is expanded, click the minus symbol (–) next to the *Users* icon to collapse it; if it is collapsed there is a plus symbol (+) next to the icon. Click the plus symbol to expand it.
   - The icon for administrators has one red band.
   - The large main panel shows the user's name; the description that was given when the account was created; and whether the account is currently active or has been disabled.

Modifying User Accounts

To modify a user account, do the following:

1. In the Sidebar *User* list, click the user's name

   – or –

   In the main panel, select the user's name
2. Click **Modify**.
3. In the *User* page that comes up, make your changes, then click **Save**.

Note: The *User* page is discussed on page 114; the *Devices* page is discussed on page 118.

Deleting User Accounts

To delete a user account do the following:

1. In the main panel, select the user's name.
2. Click **Delete**.
3. Click **OK**.

Device Assignment

When a user logs in to the KL1508Ai / KL1516Ai, the interface comes up with the Port Access page displayed. All the ports that the user is permitted to access are listed in the Sidebar at the left of the page. Access permissions for those ports and the devices connected to them are assigned on a port-by-port basis from the *User* list on the Sidebar of the User Management page.

Assigning Device Permissions From the User's Notebook

To assign a device permissions to a user from the *User's* notebook, do the following:

1. In the Sidebar *User* list, click the user's name

   – or –

   In the main panel, select the user's name.

2. Click **Modify**.

3. In the *User* notebook that comes up, select the *Devices* tab. A screen, similar to the one below, appears:

Name	Access Rights
[01-16]	
[01] PMSSPS	
[02]	
[03]	
[04]	
[05]	
[06]	
[07]	
[08] KA7520	
[09]	
[10]	
[11]	

4. Make your permission settings for each port according to the information provided below:

Name: Each port accessible to the user is listed under the *Names* column.

Access: The *Access* column is where device access rights are set. Click the icon in the row that corresponds to the port you want to configure to cycle through the choices. The meanings of the icons are described in the table, below:

	Full Access	The user can view the remote screen and can perform operations on the remote server from his keyboard and monitor.
	View Only	The user can only view the remote screen and cannot perform any operations on it.
	No Access	No access rights – the Port will not show up on the User's list on the Main Screen.

5. When you have finished making your choices, click **Save**.
6. In the confirmation popup that appears, click **OK**.

Note: In any of the columns, you can use Shift-Click or Ctrl-Click to select a group of ports to configure. Clicking to cycle through the choices on any one of the selected ports causes all of them to cycle in unison.

This Page Intentionally Left Blank

Chapter 11
Device Management

KVM Devices

Device Information

The Device Management page opens with the top level KL1508Ai / KL1516Ai selected in the Sidebar and the *Device Configuration* item selected on the menu bar:

Browser GUI

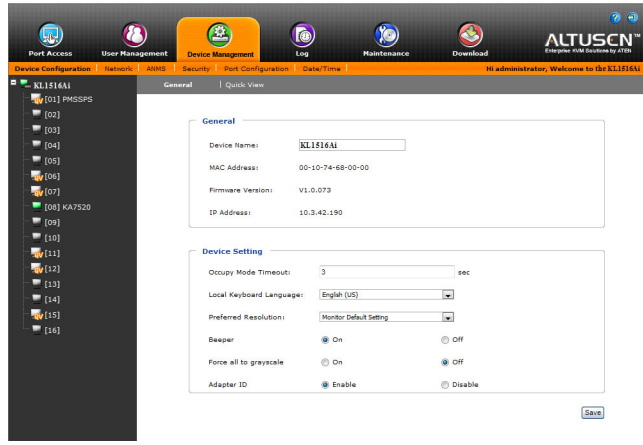

AP GUI

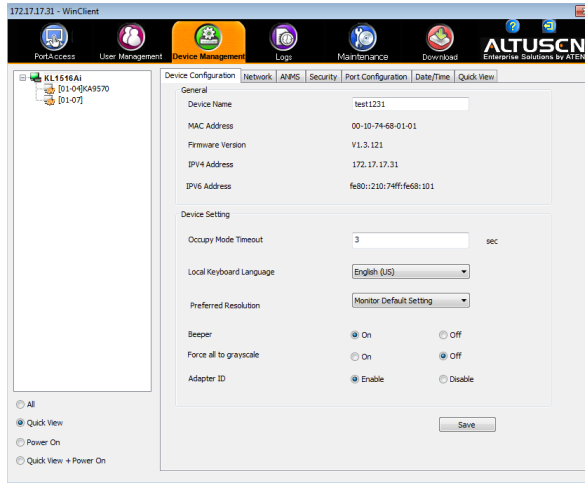

General

The *General* section of the Device Management page displays the name of the selected device, its firmware version, and information about its network configuration.

Note: The AP GUI version presents the same information as the Browser version. Scroll through the list to see the additional entries.

Device Setting

The lower panel presents information concerning the device's settings, as described , below:

- Use *Occupy Timeout Mode* to set a time threshold for users on ports whose Operation Mode has been set to Occupy (See *Port Configuration*, page 139). If there is no activity from the user occupying the port for the amount of time set here, the user is timed out and keyboard and mouse control on the port is released, after which the first user to send keyboard or mouse input will occupy the port. However, the user originally connected to the port will still see the port's video output. The default is 3 minutes.
- Use *Local Keyboard Language* to select the language for the local keyboard from the drop-down menu. The default is English (US).
- *Preferred Resolution* allows you to set the preferred resolution for an external display connected to the switches console port, which will be sent to the KVM adapter cables. The KVM adapter cables provide the connected computer's video card with EDID information about the monitor connected to the switch. This affects the video quality displayed on the external console monitor.
  - *Monitor Default Settings:* Sends the EDID information provided by the switches LCD monitor – to the KVM adapter cable.
  - *Alternative Resolution:* Sends the alternative resolution (EDID information) selected for the external display connected to the switches console port – to the KVM adapter cables. Select a resolution that best suits the video display for the monitor connected to the switches console port.
- Turns the *Beeper* on or off.
- If *Force all to grayscale* is enabled, the remote displays of all devices connected to the KL1508Ai / KL1516Ai are changed to grayscale. This can speed up I/O transfer in low bandwidth situations.

- If the *Adapter ID* function is enabled (the default), the switch stores adapter cable information for each of its ports, so that when you move a KVM Adapter Cable from one port to another, it remembers the adapter cable's port properties information at the new location.

Network

The Network page is used to specify the network environment.

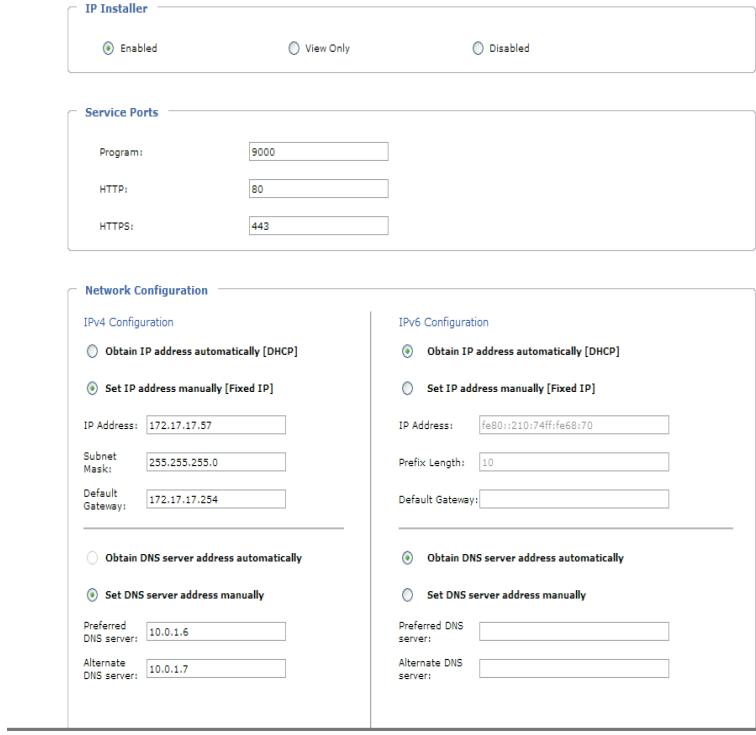

Each of the elements on this page is described in the sections that follow.

IP Installer

The IP Installer is an external Windows-based utility for assigning IP addresses to the KL1508Ai / KL1516Ai.

Click one of the radio buttons to select *Enable*, *View Only*, or *Disable* for the IP Installer utility. See *IP Installer*, page 192, for IP Installer details.

Note: 1. If you select *View Only*, you will be able to see the KL1508Ai / KL1516Ai in the IP Installer's Device List, but you will not be able to change the IP address.

2. For security, we strongly recommend that you set this to *View Only* or *Disable* after each use.

Service Ports

As a security measure, if a firewall is being used, the Administrator can specify the port numbers that the firewall will allow. If a port other than the default is used, users must specify the port number as part of the IP address when they log in. If an invalid port number (or no port number) is specified, the KL1508Ai / KL1516Ai will not be found. An explanation of the fields is given in the table below:

Field	Explanation
Program	This is the port number for connecting with the WinClient ActiveX Viewer, WinClient AP, Java Applet Viewer, Java Client AP, or via Virtual Media. The default is 9000.
HTTP	The port number for a browser login. The default is 80.
HTTPS	The port number for a secure browser login. The default is 443.

Note: 1. Valid entries for all of the Service Ports are from 1–65535.

2. Service ports cannot have the same value. You must set a different value for each one.

3. If there is no firewall (on an Intranet, for example), it doesn't matter what these numbers are set to, since they have no effect.

Network Configuration

IPv4 Settings

- IP Address:

  IPv4 is the traditional method of specifying IP addresses. The KL1508Ai / KL1516Ai can either have its IP address assigned dynamically (DHCP), or it can be given a fixed IP address.

  - For dynamic IP address assignment, select the *Obtain IP address automatically* radio button. (This is the default setting.)
  - To specify a fixed IP address, select the *Set IP address manually* radio button and fill in the fields with values appropriate for your network.

  Note: 1. If the switch is on a network that uses DHCP to assign network addresses, and you need to ascertain its IP address, see *IP Address Determination*, page 192, for information.

- DNS Server
  - For automatic DNS Server address assignment, select the *Obtain DNS Server address automatically* radio button.
  - To specify the DNS Server address manually, select the *Set DNS server address manually* radio button, and fill in the addresses for the Preferred and Alternate DNS servers with values appropriate for your network.

  Note: Specifying the Alternate DNS Server address is optional.

- IPv6 Settings
  - IP Address:

    IPv6 is the new (128-bit) format for specifying IP addresses. (See *IPv6*, page 194 for further information.) The KL1508Ai / KL1516Ai can either have its IPv6 address assigned dynamically (DHCP), or it can be given a fixed IP address.

    - For dynamic IP address assignment, select the *Obtain IP address automatically* radio button. (This is the default setting.)
    - To specify a fixed IP address, select the *Set IP address manually* radio button and fill in the fields with values appropriate for your network.
  - DNS Server
    - For automatic DNS Server address assignment, select the *Obtain DNS Server address automatically* radio button.
    - To specify the DNS Server address manually, select the *Set DNS server address manually* radio button, and fill in the addresses for the Preferred and Alternate DNS servers with values appropriate for your network.

Note: Specifying the Alternate DNS Server address is optional.

ANMS

The ANMS (Advanced Network Management Settings) page is used to set up login authentication and authorization management from external sources. It is organized as described, below:

Event Destination

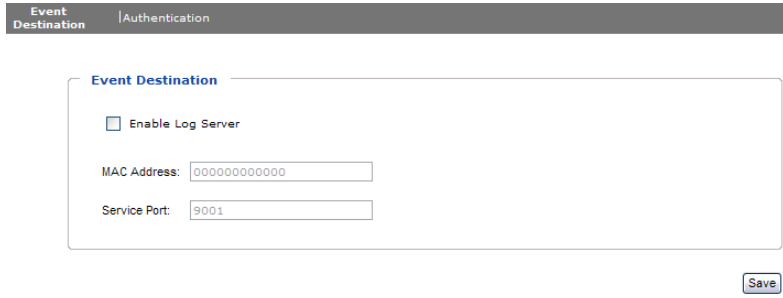

- Log Server

  When *Enable Log Server* is checked, important transactions that occur on the KL1508Ai / KL1516Ai, such as logins and internal status messages, are kept in an automatically generated log file.

  - Specify the MAC address of the computer that the Log Server runs on in the *MAC address* field.
  - Specify the service port used by the computer that the Log Server runs on to listen for log details in the *Port* field. The valid port range is 1–65535. The default port number is 9001.

Note: The port number must different than the one used for the *Program* port (see *Program*, page 124).

See Chapter 17, *The Log Server*, for details on setting up the log server. The Log File is discussed on page 146.

Authentication and Authorization

- Disable Local Authentication

  Selecting this option disables login authentication on the KL1508Ai / KL1516Ai. The switch can only be accessed using LDAP, LDAPS, MS Active Directory, RADIUS or CC Management authentication.

- RADIUS Settings

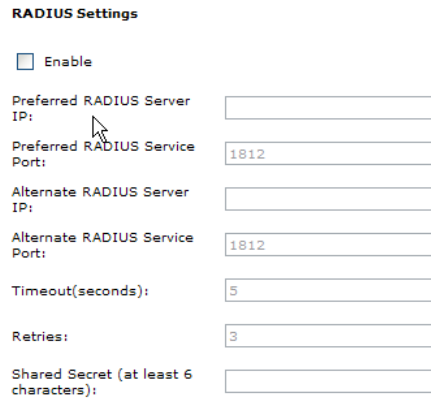

To allow authentication and authorization for the KL1508Ai / KL1516Ai through a RADIUS server, do the following:

1. Check **Enable**.
2. Fill in the IP addresses and service port numbers for the Preferred and Alternate RADIUS servers. You can use the IPv4 address, the IPv6 address or the domain name in the IP fields.
3. In the *Timeout* field, set the time in seconds that the KL1508Ai / KL1516Ai waits for a RADIUS server reply before it times out.
4. In the *Retries* field, set the number of allowed RADIUS retries.
5. In the *Shared Secret* field, key in the character string that you want to use for authentication between the KL1508Ai / KL1516Ai and the RADIUS Server. A minimum of 6 characters is required.

(Continues on next page.)

(Continued from previous page.)

6. On the RADIUS server, Users can be authenticated with any of the following methods:
   - Set the entry for the user as **su/xxxx**
   - Where *xxxx* represents the Username given to the user when the account was created on the KL1508Ai / KL1516Ai.
   - Use the same Username on both the RADIUS server and the KL1508Ai / KL1516Ai.
   - Use the same Group name on both the RADIUS server and the KL1508Ai / KL1516Ai.
   - Use the same Username/Group name on both the RADIUS server and the KL1508Ai / KL1516Ai.

   In each case, the user's access rights are the ones assigned that were assigned when the User Group was created on the KL1508Ai / KL1516Ai. (See *Adding Users*, page 114.)

- LDAP / LDAPS Authentication and Authorization Settings

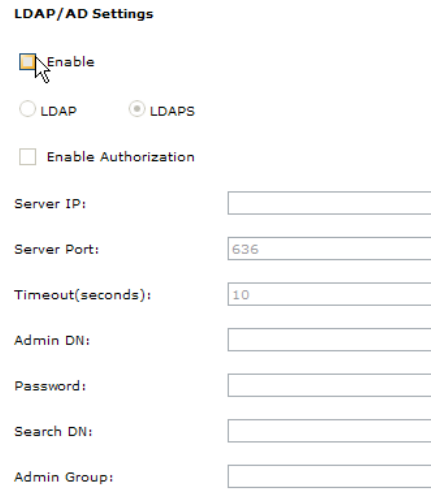

To allow authentication and authorization for the KL1508Ai / KL1516Ai via LDAP / LDAPS, refer to the information in the table, below:

Item	Action
Enable	Put a check in the *Enable* checkbox to allow LDAP / LDAPS authentication and authorization.
Type	Click a radio button to specify whether to use LDAP or LDAPS.
LDAP Server IP and Port	Fill in the IP address and port number for the LDAP or LDAPS server. ◆ You can use the IPv4 address, the IPv6 address or the domain name in the *LDAP Server* field. ◆ For LDAP, the default port number is 389; for LDAPS, the default port number is 636.
Timeout	Set the time in seconds that the KL1508Ai / KL1516Ai waits for an LDAP or LDAPS server reply before it times out.
Admin DN	Consult the LDAP / LDAPS administrator to ascertain the appropriate entry for this field. For example, the entry might look like this: ou=kl1516ai,dc=aten,dc=com
Admin Name	Key in the LDAP administrator's username.
Password	Key in the LDAP administrator's password.
Search DN	Set the distinguished name of the search base. This is the domain name where the search starts for user names.
Admin Group	Key in the Group Name for *KL1508Ai / KL1516Ai* administrator users. If *Enable Authorization* is not checked, this field is used to authorize users that are logging in. If a user is in this group, the user receives full access rights. If a user is not in this group, the user only receives limited access rights. Consult the LDAP / LDAPS administrator to ascertain the appropriate value.

(Continues on next page.)

(Continued from previous page.)

On the LDAP / LDAPS server, Users can be authenticated with any of the following methods:

- With MS Active Directory schema.
- Without schema – Only the Usernames used on the KL1508Ai / KL1516Ai are matched to the names on the LDAP / LDAPS server. User privileges are the same as the ones configured on the switch.
- Without schema – Only Groups in AD are matched. User privileges are the ones configured for the groups he belongs to on the switch.
- Without schema – Usernames and Groups in AD are matched. User privileges are the ones configured for the User and the Groups he belongs to on the switch.

CC Management Settings

To allow authorization for the KL1508Ai / KL1516Ai through a CC (Control Center) server, check *Enable* and fill in the CC Server's IP address and Service port in the appropriate fields. You can use the IPv4 address, the IPv6 address or the domain name in the *CC Server IP* field.

Security

The Security page is divided into six main panels, as described in the sections that follow.

Login Failures

For increased security, the Login Failures section allows administrators to set policies governing what happens when a user fails to log in successfully.

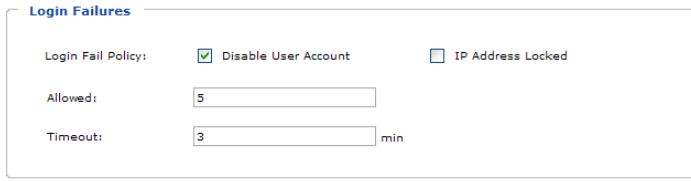

To set the Login Failures policy, check the *Enable* checkbox (the default is for Login Failures to be enabled). The meanings of the entries are explained in the table below:

Entry	Explanation
Disable User Account	If this is enabled, after the allowed number of failures have been exceeded, the user attempting to log in is automatically locked out. No logins from the username and password that have failed will be accepted. The default is enabled.
IP Address Locked	If this is enabled, after the allowed number of failures have been exceeded, the computer attempting to log in from that IP is automatically locked out. No logins from that computer will be accepted. The default is enabled. **Note:** If the IP is changed, the computer will no longer be locked out.
Allowed	Sets the number of consecutive failed login attempts that are permitted from a remote computer. The default is 5 times.
Timeout	Sets the amount of time a remote computer must wait before attempting to login again after it has exceeded the number of allowed failures. The default is 3 minutes.

Note: If Login Failures is not enabled, users can attempt to log in an unlimited number of times with no restrictions. For security purposes, we recommend that you enable this function and enable the lockout policies.

Login String

The *Login String* entry field lets the administrator specify a login string (in addition to the IP address) that users must add to the IP address when they access the KL1508Ai / KL1516Ai with a browser.

For example, if *192.168.0.126* were the IP address, and *abcdefg* were the login string, then the user would have to key in:

```
192.168.0.126/abcdefg
```

Note: 1. Users must place a forward slash between the IP address and the string.

2. If no login string is specified here, anyone will be able to access the KL1508Ai / KL1516Ai login page using the IP address alone. This makes your installation less secure.

The following characters are allowed in the string:

0–9 a–z A–Z ~ ! @ $ & * ( ) _ - = + [ ] , . |

The following characters are not allowed:

% ^ ” : / ? # \ ‘ { } ; ’ < > [Space]
Compound characters (É Ç ñ ... etc.)

For security purposes, we recommend that you change this string occasionally.

Security

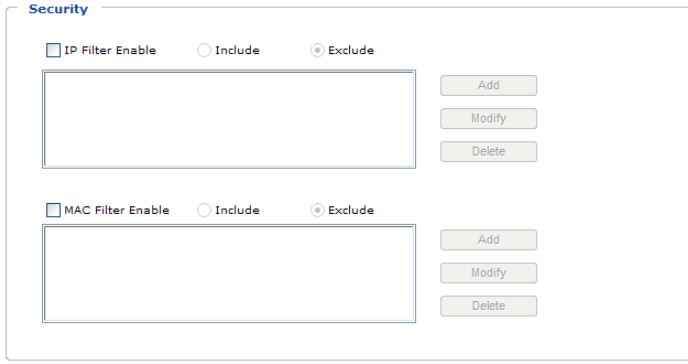

- IP and MAC Filtering

  IP and MAC Filters control access to the KL1508Ai / KL1516Ai based on the IP and/or MAC addresses of the client computers attempting to connect. A maximum of 100 IP filters and 100 MAC filters are allowed. If any filters have been configured, they appear in the IP Filter and/or MAC Filter list boxes.

  To enable IP and/or MAC filtering, **Click** to put a check mark in the *IP Filter Enable* and/or *MAC Filter Enable* checkbox.

  - If the *Include* button is checked, all the addresses within the filter range are allowed access; all other addresses are denied access.
  - If the *Exclude* button is checked, all the addresses within the filter range are denied access; all other addresses are allowed access.

- Adding Filters

  To add an IP filter, do the following:

  1. Click **Add**. A script prompt dialog box appears.
  2. Specify whether you are filtering an IPv4 or IPv6 address.
  3. Key the address you want to filter in the *Start:* field
  4. Click **OK**.
  5. Key the address you want to filter in the *End*: field.

  Note: This description is for the AP GUI. The Browser GUI differs as follows:

  1. It doesn't offer an IPv4 or IPv6 choice. It only has *From* and *To* fields for IPv4 filtering.
  2. It doesn't have a checkbox to specify a single IP address. To filter a single IPv4 address, key the same address in both the *From* and *To* fields.

  6. Click **OK**.
  7. Repeat these steps for any additional IP addresses, or IP Address ranges you want to filter.

To add a MAC filter, do the following:

1. Click **Add**. A script prompt dialog box.
2. Specify the MAC address in the dialog box, then click **OK**.
3. Repeat these steps for any additional MAC addresses you want to filter.

- IP Filter / MAC Filter Conflict

  If there is a conflict between an IP filter and a MAC filter – in other words, if a computer's address is allowed by one filter but blocked by the other – then the blocking filter takes precedence (the computer's access is blocked).

- Modifying Filters

  To modify a filter, select it in the IP Filter or MAC Filter list boxes and click **Modify**. The Modify dialog box is similar to the Add dialog box. When it comes up, simply delete the old address(es) and replace it with the new one(s).

- Deleting Filters

  To delete a filter, select it in the IP Filter or MAC Filter list box and click **Delete**.

Encryption

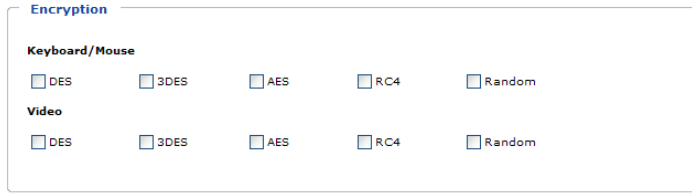

These flexible encryption alternatives for keyboard/mouse and video let you choose any combination of DES; 3DES; AES; RC4; or a Random cycle of any or all of them.

Enabling encryption affects system performance – no encryption offers the best performance; the greater the encryption the greater the adverse effect. If you enable encryption, the performance considerations are as follows:

- RC4 offers the least impact on performance; DES is next; then 3DES or AES
- The RC4 + DES combination offers the least impact of any combination

Working Mode

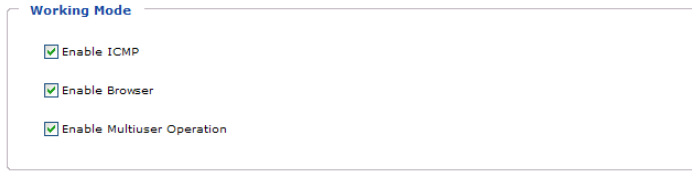

An explanation of the Working Mode items is given in the table, below:

Item	Explanation
Enable ICMP	If *ICMP* is **enabled**, the KL1508Ai / KL1516Ai can be pinged. If it is not enabled, the device cannot be pinged. The default is Enabled.
Enable Multiuser Operation	Enabling *Multiuser operation* permits up to 32 users to log in at the same time to share the remote bus. If not enabled, only one user can log in at a time. The default is Enabled.
Enable Browser	Enabling *Browser* means browser access is permitted. If this is disabled, users must access the switch with an HTTP URL.

Private Certificate

When logging in over a secure (SSL) connection, a signed certificate is used to verify that the user is logging in to the intended site. For enhanced security, the *Private Certificate* section allows you to use your own private encryption key and signed certificate, rather than the default ATEN certificate.

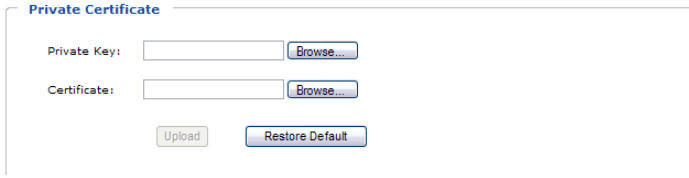

There are two methods for establishing your private certificate: generating a self-signed certificate; and importing a third-party certificate authority (CA) signed certificate.

- Generating a Self-Signed Certificate

  If you wish to create your own self-signed certificate, a free utility – openssl.exe – is available for download over the web. See *Self-Signed Private Certificates*, page 199 for details about using OpenSSL to generate your own private key and SSL certificate.

- Obtaining a CA Signed SSL Server Certificate

  For the greatest security, we recommend using a third party certificate authority (CA) signed certificate. To obtain a third party signed certificate, go to a CA (Certificate Authority) website to apply for an SSL certificate. After the CA sends you the certificate and private encryption key, save them to a convenient location on your computer.

- Importing the Private Certificate

  To import the private certificate, do the following:

  1. Click **Browse** to the right of *Private Key*; browse to where your private encryption key file is located; and select it.
  2. Click **Browse** to the right of *Certificate*; browse to where your certificate file is located; and select it.
  3. Click **Upload** to complete the procedure.

Note: 1. Clicking **Restore Default** returns the device to using the default ATEN certificate.

2. Both the private encryption key and the signed certificate must be imported at the same time.

Port Configuration

The Port Configuration page displays status information and allows you to set the properties of a port that has been selected in the Sidebar.

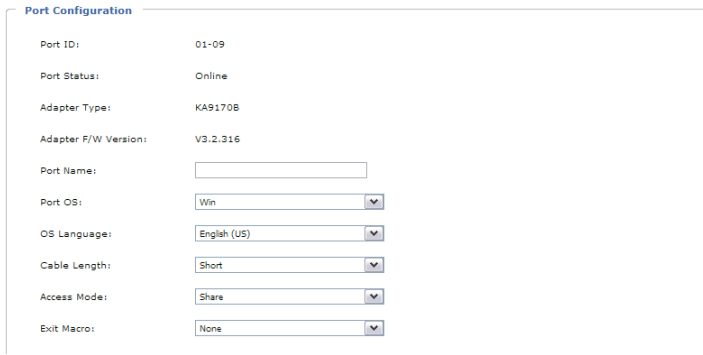

An explanation of the configuration fields is given in the table, below:

Field	Explanation
Port OS	Specifies the operating system that the server on the connected port is using. Choices are Win, Mac, Sun, and Other. The default is Win.
OS Language	Specifies the OS language being used by the server on the connected port. Drop down the list to see the available choices. The default is English US.
Cable Length	Specifies the length of the Cat5e/6 cable that is used to connect the server to the port. Choices are Short (less than 10 m), Medium (10–25 m), and Long (greater than 25 m). The default is Short. **Note:** Cable length can affect video quality. Generally speaking, shorter cables offer better quality. This setting is designed to compensate for longer or shorter cable lengths. You can experiment to find the setting that best suits your connection.
Access Mode	Defines how the port is to be accessed when multiple users have logged on, as follows: **Exclusive:** The first user to switch to the port has exclusive control over the port. No other users can view the port. The *Timeout* function does not apply to ports which have this setting. **Occupy:** The first user to switch to the port has control over the port. However, additional users may view the port's video display. If the user who controls the port is inactive for longer than the time set in the *Timeout* box, port control is transferred to the first user to move the mouse or strike the keyboard. **Share:** Users simultaneously share control over the port. Input from the users is placed in a queue and executed chronologically.

Field	Explanation
Exit Macro	The Exit Macro panel contains a dropdown list box of user created System macros. You can select a macro from the list that will execute when exiting the remote server. See *System Macros*, page 83 for details on creating exit macros.

Date/Time

The Date/Time dialog page sets the KL1508Ai / KL1516Ai time parameters. Set the parameters according to the information below.

Time Zone

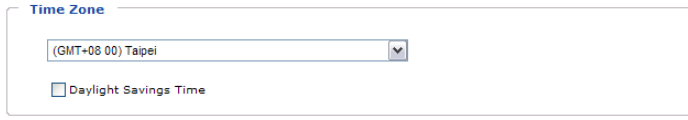

- To establish the time zone that the KL1508Ai / KL1516Ai is located in, drop down the *Time Zone* list and choose the city that most closely corresponds to where it is at.
- If your country or region employs Daylight Saving Time (Summer Time), check the corresponding checkbox.

Date

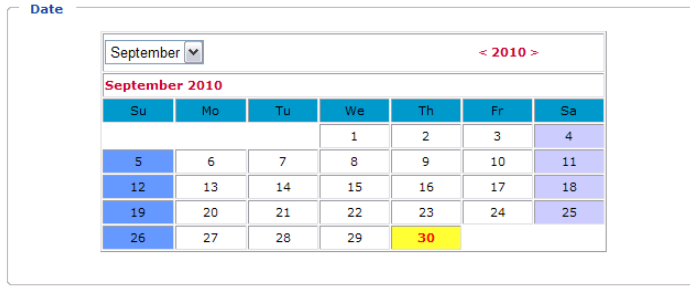

- Select the month from the dropdown listbox.
- Click < or > to move backward or forward by one year increments.
- In the calendar, click on the day.
- To set the time, use the 24 hour HH:MM:SS format.
- Click **Set** to save your settings.

Time

To manually set the time, enter the values in the boxes and click **Set**.

Network Time

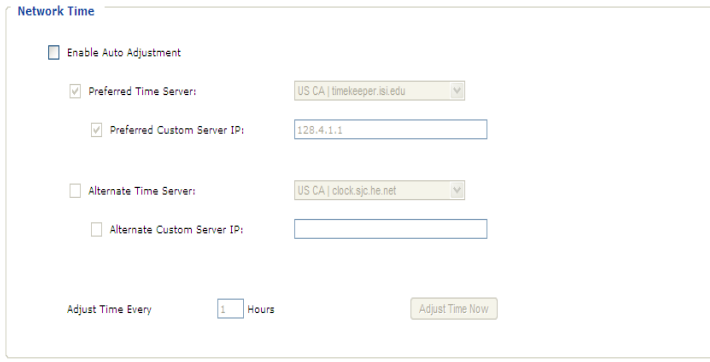

To have the time automatically synchronized to a network time server, do the following:

1. Check the *Enable auto adjustment* checkbox.
2. Drop down the time server list to select your preferred time server

   – or –

   Check the *Preferred custom server IP* checkbox, and key in either the IPv4 address, IPv6 address, or domain name of the time server of your choice.
3. If you want to configure an alternate time server, check the *Alternate time server* checkbox, and repeat step 2 for the alternate time server entries.
4. Key in your choice for the number of days between synchronization procedures.
5. If you want to synchronize immediately, click **Adjust Time Now**.

Set Quick View Ports

The *Quick View* tab in the Device Management page lets the administrator select which ports to include as quick view ports.

- To select/deselect a port as a quick view port, check the *Enable Quick View* box for that port.
- When a port has been selected as quick view, an icon appears next to the port number in the Sidebar and in the port list on the main screen. When a port is deselected, the icon disappears.
- Click *Save* at the bottom of the page to save your selections.

This Page Intentionally Left Blank

Chapter 12
Log

Overview

The KL1508Ai / KL1516Ai logs all the events that take place on it. To view the contents of the log, click the *Log* tab. The device's Log Information page, similar to the one below, appears:

Browser GUI

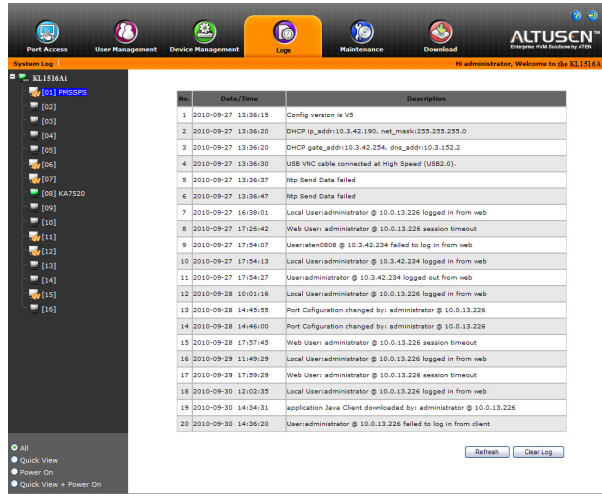

AP GUI

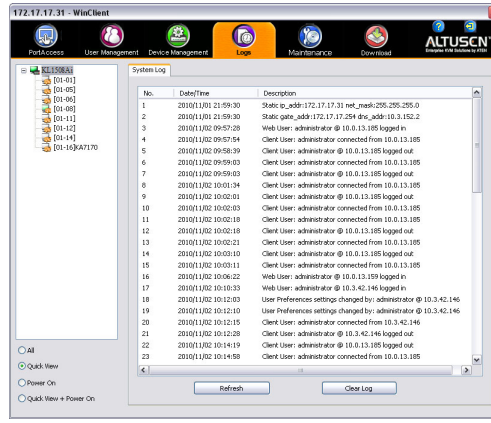

Log Information

The Log page displays events that take place on the KL1508Ai / KL1516Ai, and provides a breakdown of the time, the user, and a description of each one. You can change the sort order of the display by clicking on the column headings.

The log file tracks a maximum of 512 events. When the limit is reached, the oldest events get discarded as new events come in.

Chapter 13
Maintenance

Overview

The *Maintenance* function is used to upgrade firmware; backup and restore configuration and account information; and restore default values.

Browser GUI

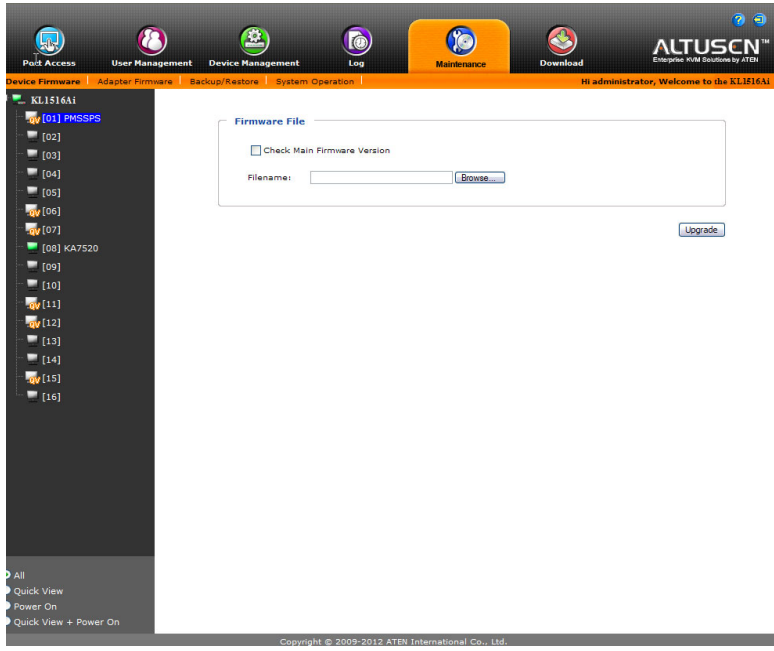

AP GUI

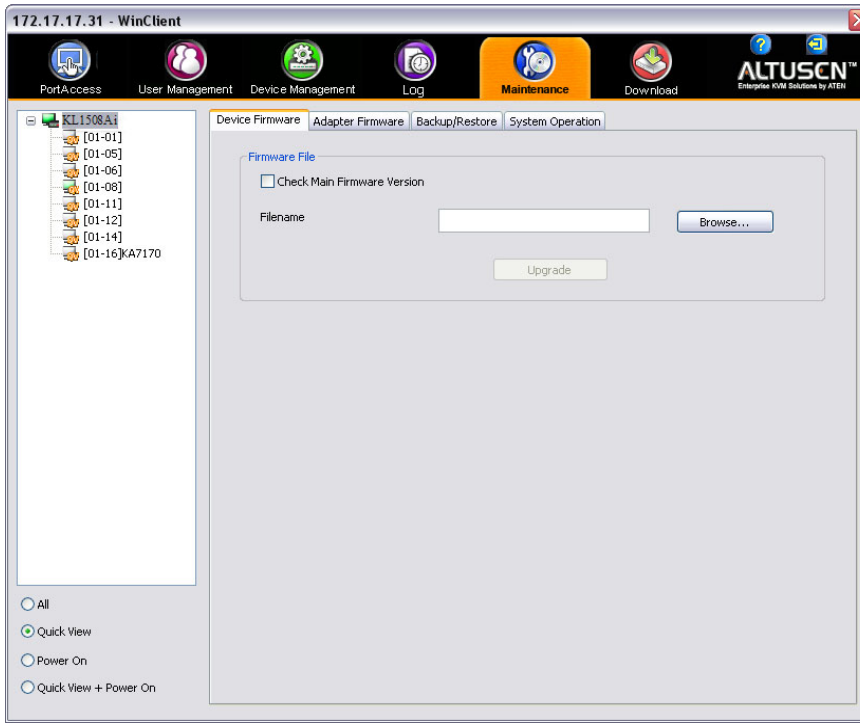
172.17.17.31 - WinClient
PortAccess
User Management
Device Management
Log
Maintenance
Download
ALTUSCN
Enterprise KVM Solutions by ATEN
KL1508Ai
[01-01]
[01-05]
[01-06]
[01-08]
[01-11]
[01-12]
[01-14]
[01-16]KA7170
All
Quick View
Power On
Quick View + Power On
Device Firmware
Adapter Firmware
Backup/Restore
System Operation
Firmware File
Check Main Firmware Version
Filename
Browse...
Upgrade

Device Firmware Upgrade (IP Card)

As new versions of the firmware become available, they can be downloaded from our website. Check the website regularly to find the latest information and packages.

To upgrade the device firmware, do the following:

1. Download the latest IP card firmware to your computer.
2. Log in to the KL1508Ai / KL1516Ai; and click the *Maintenance* tab. The Maintenance tab opens to the *Firmware File* page:

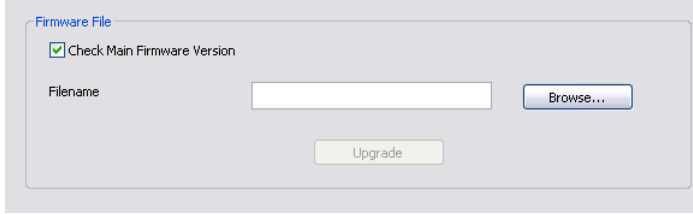

3. Click **Browse**; navigate to the directory that the new IP card firmware file is in and select the file.
4. Click **Upgrade Firmware** to start the upgrade procedure.
   - If you enabled *Check Main Firmware Version*, the current firmware version is compared with that of the upgrade file. If the current version is equal to or higher than the upgrade version, a popup message appears to inform and stops the upgrade procedure.
   - If you didn't enable *Check Main Firmware Version*, the upgrade file is installed without checking what its version is.
   - As the upgrade proceeds, progress information is shown in the *Progress bar*.
   - Once the upgrade completes successfully, the switch resets itself.
5. Log in again, and check the firmware version to be sure it is the new one.

Note: To recover from a “failed upgrade” situation, see *Device Firmware (IP Card)*, page 153.

Adapter Firmware Upgrade (Mainboard and KVM Adapter Cables)

The *Adapter Firmware* page is used to upgrade the firmware of the mainboard and KVM adapter cables.

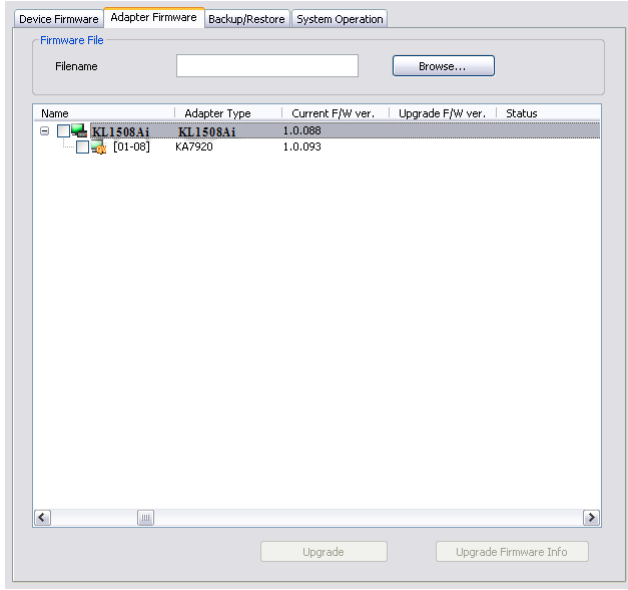

Mainboard Firmware Upgrade

To perform this upgrade, do the following:

1. Download the latest mainboard firmware package to your computer.
2. Log in to the KL1508Ai / KL1516Ai; and click the *Maintenance* tab; and select the *Adapter Firmware* menu item.
3. Click **Browse**; navigate to the directory that the new mainboard firmware package file is in and select the file.

   Note: The mainboard firmware package contain software for device mainboards as well as KVM adapter cables.

4. The *Adapter Firmware* menu will now display a list of the mainboard firmware versions that are stored in the chosen file.

5. Compare the mainboard firmware version stored in the firmware package with the version listed in the *Current F/W Version* column of the Main Panel. If the version stored in the new firmware package are newer than the one on the mainboard, you will probably want to perform the upgrade.
6. In the *Name* column of the Main Panel, check the port whose device you want to upgrade. Here you can select whether to upgrade the firmware for just the mainboard (top checkbox), just the KVM adapter cables (bottom checkbox), or both.
7. Click **Upgrade** to start the upgrade procedure.
   - When the procedure completes the new adapter firmware version is displayed.

KVM Adapter Cables Firmware Upgrade

To perform this upgrade, do the following:

1. Download the latest mainboard firmware package to your computer.
2. Log in to the KL1508Ai / KL1516Ai; and click the *Maintenance* tab; and select the *Adapter Firmware* menu item.
3. Click **Browse**; navigate to the directory that the new mainboard firmware package file is in and select the file.

   Note: The mainboard firmware package contain software for device mainboards as well as KVM adapter cables.

4. The *Adapter Firmware* menu will now display a list of the KVM adapter cable firmware versions that are stored in the chosen file.
5. Compare the adapter firmware version stored in the main firmware with the version listed in the *Current F/W Version* column of the Main Panel. If the version stored in the new firmware package are newer than the one on the adapter, you will probably want to perform the adapter upgrade.
6. In the *Name* column of the Main Panel, check the port whose device you want to upgrade. Here you can select whether to upgrade the firmware for just the mainboard (top checkbox), just the KVM adapter cables (bottom checkbox), or both.
7. Click **Upgrade** to start the upgrade procedure.
   - When the procedure completes the new adapter firmware version is displayed.

Note: 1. The switch may work with older adapter firmware versions, but for optimum compatibility we recommend upgrading your KVM adapter cable firmware to that stored in the switch's latest mainboard firmware package.

2. You can perform the upgrade procedure anytime you add an KVM adapter cable to the installation to make sure it is working with the latest firmware version.

3. To recover from a "failed upgrade" situation, see *Adapter Firmware (Mainboard and KVM Adapter Cables)*, page 153.

Firmware Upgrade Recovery

Device Firmware (IP Card)

Should the switch's main firmware upgrade procedure fail, and the switch becomes unusable, the following firmware upgrade recovery procedure will resolve the problem:

1. Power off the switch.
2. Press and hold the reset button in (see *lock LEDs & reset button*, page 11).
3. While holding the reset button in, power the switch back on.

This causes the switch to use the original factory installed main firmware version. Once the switch is operational, you can try upgrading the main firmware again.

Adapter Firmware (Mainboard and KVM Adapter Cables)

Should the adapter firmware upgrade procedure fail for one of the KVM Adapter Cables and the adapter becomes unusable, the following adapter firmware upgrade recovery procedure will resolve the problem:

1. Unplug the Adapter from the server it is connected to.
2. Slide its *firmware upgrade recovery switch* (located next to the Cat 5e connector) to the **RECOVER** position.
3. Plug the Adapter back into the server.
4. Repeat the Adapter upgrade procedure.
5. After the Adapter has been successfully upgraded, unplug the Adapter from the server it is connected to; slide the firmware upgrade recovery switch back to the **NORMAL** position; and plug the Adapter back in.

Backup/Restore

Selecting the Backup / Restore menu item gives you the ability to back up the switch's configuration and user profile information:

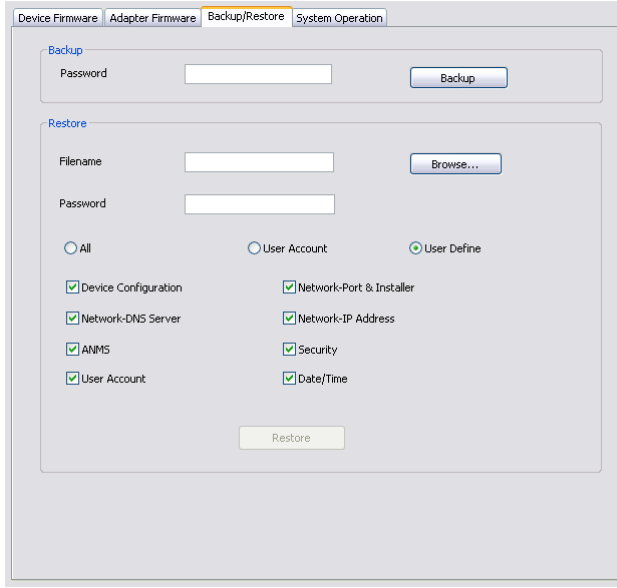

Backup

To backup the device's settings do the following:

1. In the *Password* field, key in a password for the file.

   Note: 1. Setting a password is optional. If you do not set one, the file can be restored without specifying a password.

   2. If you do set a password, make a note of it, since you will need it to be able to restore the file.

2. Click **Backup**.
3. When the browser asks what you want to do with the file, select *Save to disk*; then save it in a convenient location.

System Operation

The *System Operation* page lets you restore certain configuration changes that were made to the KL1508Ai / KL1516Ai back to their original factory default values.

]

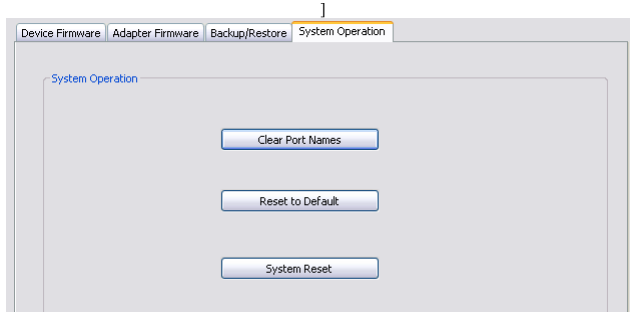

The functions performed on this page are as follows:

Clear Port Names:

Clicking this button removes names that have been assigned to the ports

Reset to Default:

Clicking this button undoes all Customization page changes that have been made to the KL1508Ai / KL1516Ai (except for the Port Names), as well as the Network Transfer Rate (on the Network page), and returns the parameters to the original factory default settings.

System Reset:

Clicking this button makes the KL1508Ai / KL1516Ai reset itself and implement all the new settings when you log out. (Following the reset, wait approximately 30 to 60 seconds before logging back in.)

Note: Even though the changed IP settings are ignored, they still remain in the network settings fields. Which means that the next time you open this page the *Reset on exit* checkbox will automatically be enabled, and when the switch resets, the new IP settings that you thought you discarded will become the ones used by the switch. To avoid this problem, you should go back to the network settings page and be sure that the IP settings that appear in the fields are the ones you want to use.

This Page Intentionally Left Blank

Chapter 14
The Firmware Upgrade Utility

Introduction

The purpose of the Windows-based Firmware Upgrade Utility is to provide an automated process for upgrading the KL1508Ai / KL1516Ai and compatible adapter cable firmware. The program comes as part of a Firmware Upgrade Package that is specific for each device.

The latest revisions of new firmware for the KL1508Ai / KL1516Ai, and supported KVM Adapter Cables are posted as Firmware Upgrade Packages on our web site. Check the website regularly to find the latest firmware packages and information relating to them.

Note: 1. A single upgrade package contains the upgrade files for the Main Board and all the supported KVM Adapter Cables.

2. KVM Adapter Cables are referred to as *I/O Modules* in some dialog boxes.

Before You Begin

To prepare for the firmware upgrade, do the following:

1. From a computer that is not part of your KVM installation go to the ATEN Internet support site and choose the model name that relates to your device to get a list of available Firmware Upgrade Packages.
2. Choose the Firmware Upgrade Package you want to install (usually the most recent), and download it to your computer.

(Continues on next page.)

(Continued from previous page.)

3. Use the firmware upgrade cable (provided with this unit), to connect a COM port on your computer to the firmware upgrade port of your device.

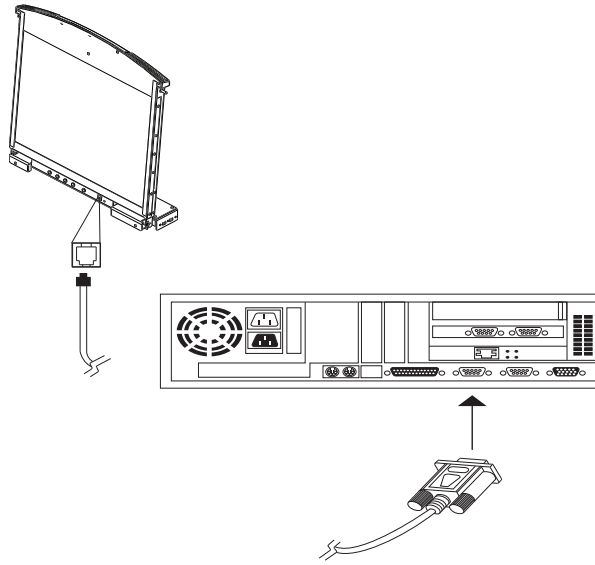

Note: On a daisy chained installation, connect the cable to the first station unit. The chained stations that are the same model will receive the upgrade via the daisy chain cables.

4. Shut down all of the computers except those that are attached to cable adapters that require upgrade. The cable adapters require the computers power source to be upgraded. Do not shut down the stations on the KVM installation that you want to upgrade.
5. From your KVM switch console, bring up the OSD (see page 37) and select the **F4ADM** function.
6. Scroll down to FIRMWARE UPGRADE. Press **[Enter]**, then press **[Y]** to start the Firmware Upgrade Mode (see page 45).

Note: The upgrade to the KVM Adapter Cables takes place via the Cat 5e/6 cable that connects the adapter cable to the KVM switch, so there is no separate firmware upgrade cable to attach.

Performing the Upgrade

Starting the Upgrade

To upgrade your firmware:

1. Run the downloaded Firmware Upgrade Package file, either by double clicking the file icon, or by opening a command line and keying in the full path to it.

   The Firmware Upgrade Utility *Welcome* screen appears:

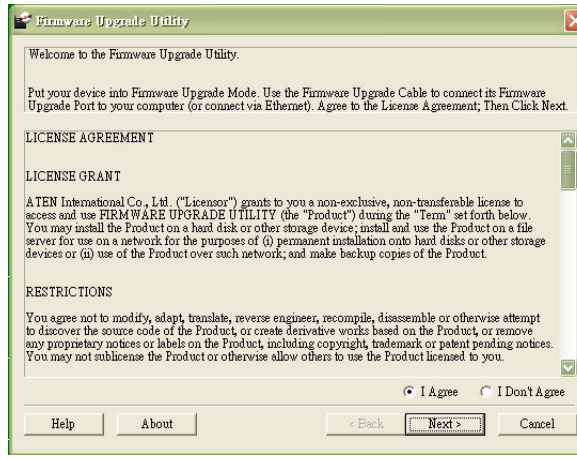

2. Read and *Agree* to the License Agreement (enable the I Agree radio button).

(Continues on next page.)

(Continued from previous page.)

3. Click **Next** to continue. The Firmware Upgrade Utility main screen appears:

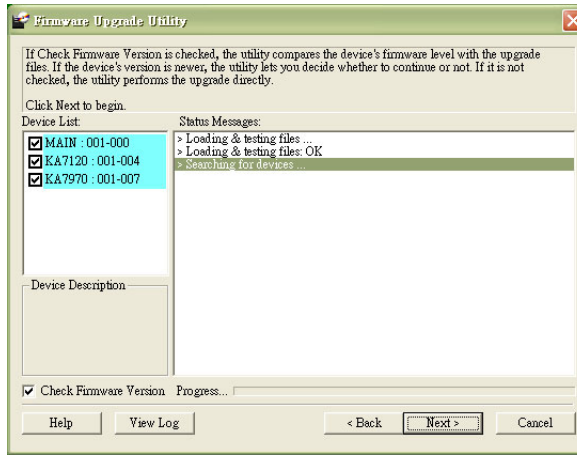

The Utility checks to make sure the KL1508Ai / KL1516Ai is in the Firmware Upgrade Mode and then lists all firmware needed preselected in the *Device List* panel.

Note: 1. The Device List lists all the models of KVM Adapter Cable that require upgrading. Selecting the model will upgrade all the devices of that particular model.

2. If the Utility fails to list any firmware check that the KL1508Ai / KL1516Ai is connected and in the Firmware Upgrade Mode. Alternatively the Firmware Package maybe corrupted or the wrong version therefore obtain a new copy of the file and retry.

4. Select MAIN to upgrade the firmware for the Main Board. Deselect any KVM Adapter Cable types that are not required to be upgraded. After you have made your selection(s), click **Next** to perform the upgrade.

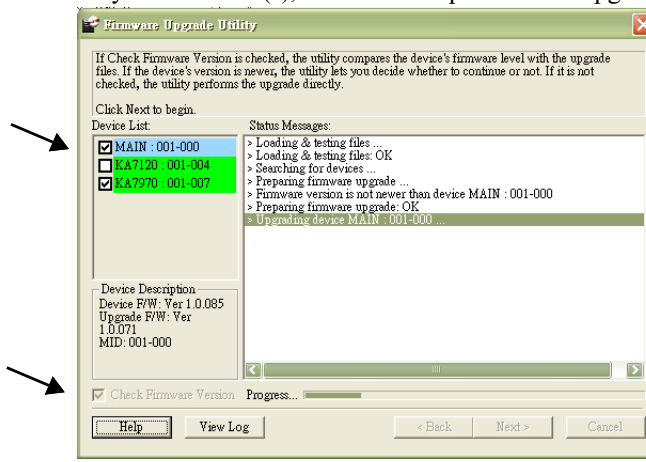

- *Check Firmware Version* - when selected the utility compares the Main Board firmware level with the upgrade files MAIN. If the device versions are higher than the upgrade versions a dialog box informs you and gives you the option to continue or cancel.

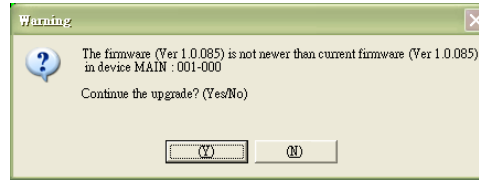

If you didn't enable *Check Firmware Version*, the utility installs the upgrade files without checking whether they are a higher level, or not.

- As the upgrade proceeds status messages appear in the *Status Messages* panel, and the progress toward completion is shown on the *Progress* bar.
- To abort the upgrade procedure before it completes, click **Cancel**.

If you cancel before completion, a dialog box warns you that the upgrade will not finish and shows the options to proceed or abort the cancel operation. The Mainboard and OSD firmware may be missing or corrupted upon rebooting the switch.

To recover from missing or corrupt firmware, see *Firmware Upgrade Recovery*, page 163.

Upgrade Succeeded

After the upgrade has completed, a screen appears to inform you that the procedure was successful:

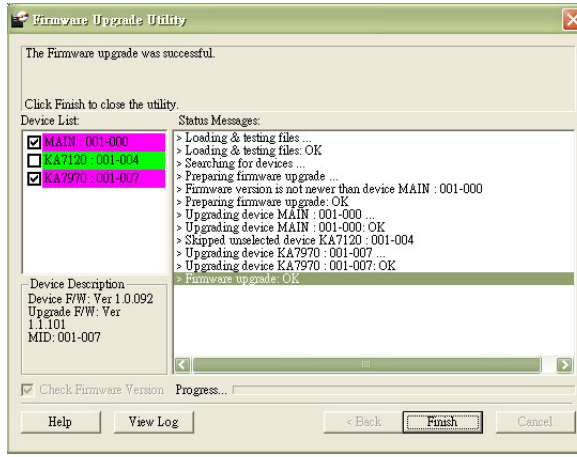

Click **Finish** to close the Firmware Upgrade Utility.

Note: At the completion of the upgrade, the KL1508Ai / KL1516Ai restarts.

Upgrade Failed

If the upgrade failed to complete successfully a dialog box appears asking if you want to retry. Click **Yes** to retry. If you click **No**, the *Upgrade Failed* screen appears.

Click **Cancel** to close the Firmware Upgrade Utility. See the next section, *Firmware Upgrade Recovery*, for how to proceed.

Firmware Upgrade Recovery

Should the firmware on the switch be missing or corrupted it may not be possible to operate or boot the switch. This could be due to:

- Starting the Firmware Upgrade Mode (see *FIRMWARE UPGRADE*, page 45), and then canceling the upgrade.
- An interruption of the firmware upgrade.
- The firmware upgrade procedure failing.
- The unit's firmware becoming corrupted for unknown reasons.

Main Board Firmware Upgrade Recovery

To perform a firmware upgrade recovery, do the following:

1. On the KVM Switch slide the *firmware upgrade recovery switch* (see page 12) to the **Recover** position.
2. Power off and restart the switch according to the instructions given in the *Powering Off and Restarting* section (see page 35).
3. Proceed with the firmware upgrade as described in *Performing the Upgrade*, starting on page 159.
4. When the upgrade ends, power off the switch
5. Slide the *firmware upgrade recovery switch* back to the **Normal** position.
6. Power on the switch.

Note: If one of the chained station KVM units fails to upgrade successfully, unchain it from the installation and perform the recovery and upgrade operation on it independently. After it has been successfully upgraded, plug it back into the chain

Adapter Cable Firmware Upgrade Recovery

To perform an adapter cable firmware upgrade recovery, do the following:

1. Unplug the adapter cable from the computer it is connected to.
2. Slide its *firmware upgrade recovery switch* (located next to the RJ45 connector) to the **Recover** position.
3. Plug the adapter cable back into the computer.
4. From your KVM switch console, bring up the OSD (see page 38) and select the **F4ADM** function.
5. Scroll down to *FIRMWARE UPGRADE*. Press **[Enter]**.
6. Press **[Y]** to invoke Upgrade Mode.
7. Proceed with the firmware upgrade as described in *Performing the Upgrade*, starting on page 159.
8. After the upgrade completes and the switch restarts, unplug the adapter cable from the computer and slide the *firmware upgrade recovery switch* back to the **Normal** position.
9. Plug the adapter cable back into the computer.

Chapter 15
Download

Overview

Download is used to download stand-alone AP versions of the Windows Client, the Java Client, the Log Server, and the PoN AP:

Click the program you want to download; save it to a convenient location on your hard disk, and run it from there.

This Page Intentionally Left Blank

Chapter 16
Port Operation

Overview

After you have successfully logged in (see *Logging In*, page 61), the KL1508Ai / KL1516Ai opens to the Port Access tab's Connections page, with the first KL1508Ai / KL1516Ai selected in the sidebar:

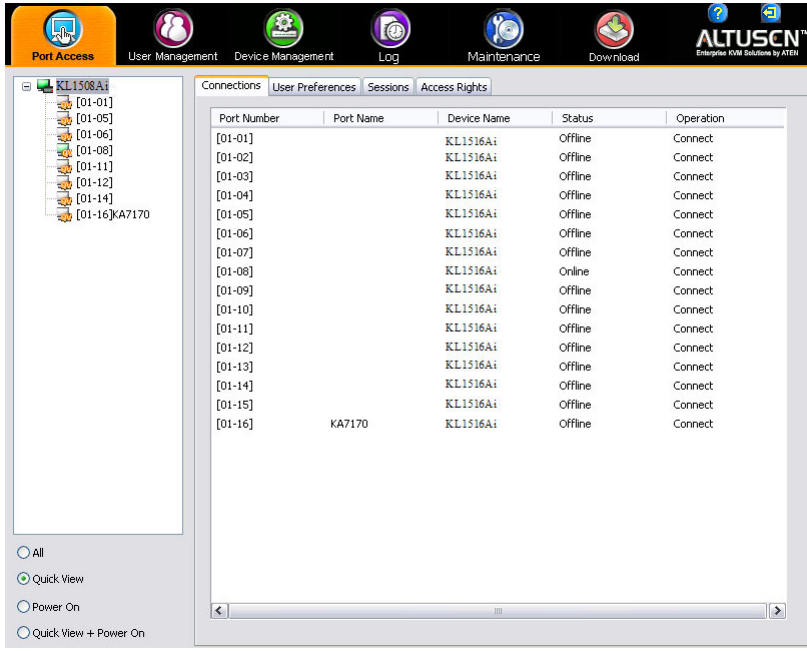

Note: See *Connections*, page 105 for details about the Port Access *Connections* page.

Connecting to a Port

All the devices, ports, and outlets that a user is permitted to access are listed in the Sidebar at the left of the page.

- To connect to a port when a device is selected in the Sidebar, double click its icon in the Sidebar; or double click anywhere on its line entry in the main central panel; or select it in the main panel and click **Connect** at the bottom right of the page.
- To connect to a port when the port is selected in the Sidebar, click **Connect** at the right of the *Status* panel (see page 105).

Once you switch to a port, its screen displays on your monitor, and your keyboard and mouse input affects the remote server:

The Port Toolbar

The KL1508Ai / KL1516Ai interface provides a toolbar to help you with port switching operations from within the captured port. To bring up the toolbar, tap the OSD hotkey (Scroll Lock or Ctrl), twice. The toolbar appears at the upper-left corner of the screen:

Depending on the settings that were selected for ID Display (see page 107), the Port Number and/or the Port Name display at the right of the toolbar. The meanings of the toolbar icons are given in a table on page 170.

When the toolbar displays, mouse input is confined to the toolbar area and keyboard input has no effect on the server connected to the port. To carry out operations on the server, close the toolbar by clicking its **X** icon.

To return to the Port Access *Connections* page, either click the appropriate icon (see *The Toolbar Icons*, page 170), or tap the OSD hotkey again.

Note: 1. You can adjust the toolbar transparency (see *Video Settings*, page 86).

2. The toolbar functions and icons are also incorporated in the Control Panel. If you choose to enable them in the Control Panel (see *Control Panel Configuration*, page 97), you can disable the Toolbar (see *User Preferences*, page 107 for details). To recall the Port Access *Connections* page when there is no Toolbar, simply tap the OSD hotkey twice.

The Toolbar Icons

The meanings of the toolbar icons are explained in the table below.

Icon	Purpose
	Click to switch to the previous station on the installation without having the recall the Port Access page.
	Click to switch to the next station on the installation without having to recall the Port Access page.
	Click to skip to the first accessible port on the entire installation, without having to recall the Port Access page.
	Click to skip to the first accessible port previous to the current one, without having to recall the Port Access page.
	Click to begin Auto Scan Mode. The KL1508Ai / KL1516Ai automatically switches among the ports that were selected for Auto Scanning. This allows you to monitor their activity without having to switch among them manually.
	Click to skip from the current port to the next accessible one, without having to recall the Port Access page.
	Click to skip from the current port to the last accessible port on the entire installation, without having to recall the Port Access page.
	Click to recall the Port Access page.
	Click to invoke Panel Array Mode (see *Panel Array Mode*, page 174).
	Click to close the toolbar.
	Click to logout and exit the application.

Toolbar Hotkey Port Switching

When the toolbar displays, you can use hotkeys to provide KVM focus to a port directly from the keyboard. The KL1508Ai / KL1516Ai provides the following hotkey features:

- Going directly to a port by keying in its port number and clicking **Enter**.
- Auto Scanning
- Skip Mode Switching

The hotkeys are: **A** and **P** for Auto Scanning; and the **Arrow Keys** for Skip Mode.

Note: 1. In order for hotkey operations to take place, the toolbar must be visible (see *The Port Toolbar*, page 169).

2. To use the keys designated as hotkeys (i.e. A, P, etc.) for normal, non-hotkey purposes, you must first close the toolbar.

3. For issues affecting multiple user operation in Auto Scan Mode, see *Multiuser Operation*, page 176.

Auto Scanning

The Scan function automatically switches among all the ports that are accessible to the currently logged on user at regular intervals, so that the user can monitor their activity automatically.

- Setting the Scan Interval:

  The amount of time Auto Scan dwells on each port is set with the *Scan Duration* setting (see *Scan Duration*, page 108).

- Invoking Auto Scan

  To start Auto Scanning, with the toolbar showing, tap the **A** key. The Auto Scan function cycles through the ports in order – starting from the first port on the installation. An S appears in front of the Port ID Display to indicate that the port is being accessed under Auto Scan Mode.

- Pausing Auto Scan

  While you are in Auto Scan Mode, you can pause the scanning in order to keep the focus on a particular server by pressing **P**. During the time that Auto Scanning is paused, the **S** in front of the Port ID blinks On and Off.

  Pausing when you want to keep the focus on a particular server can be more convenient than exiting Auto Scan Mode because when you *Resume* scanning, you start from where you left off. If, on the other hand, you were to exit and then restart Auto Scan Mode, the scanning would start over from the very first server on the installation.

  To *Resume* Auto Scanning after a pause, press any key except [Esc] or the [Spacebar]. Scanning continues from where it left off.

- Exiting Auto Scan

  While Auto Scan Mode is in effect, ordinary keyboard functions are suspended. You must exit Auto Scan Mode in order to regain normal control of the keyboard. To exit Auto Scan Mode press [Esc] or the [Spacebar]. Auto Scanning stops when you exit Auto Scan Mode.

Skip Mode

Skip Mode allows you to switch ports in order to monitor the servers manually. You can dwell on a particular port for as long or as little as you like - as opposed to Auto Scanning, which automatically switches after a fixed interval. The Skip Mode hotkeys are the four Arrow keys. Their operation is explained in the table below:

Arrow	Action
←	Skips from the current port to the first accessible port previous to it.
→	Skips from the current port to the first accessible port that comes after it.
↑	Skips from the current port to the first accessible port on the installation.
↓	Skips from the current port to the last accessible port on the installation.

Recalling the Port Access Page

To dismiss the toolbar and bring back the Port Access page, do one of the following:

- Tap the OSD hotkey once.
- From the toolbar, click the icon that recalls the Port Access page (see *The Toolbar Icons*, page 170).

The toolbar closes, and the Port Access Page appears.

Hotkey Summary Table

The following table presents a summary of the OSD hotkey actions after you have accessed a port. See *User Preferences*, page 107 to set the OSD hotkey.

To...		Do This...
Open the Toolbar		Tap the OSD hotkey twice
Open the Port Access Page	The Toolbar is open	Tap the OSD hotkey once
	The Toolbar is not open	Tap the OSD hotkey three times

Panel Array Mode

Clicking the toolbar's *Panel* icon invokes Panel Array Mode. Under this mode, the screen divides into a grid of up to 42 panels:

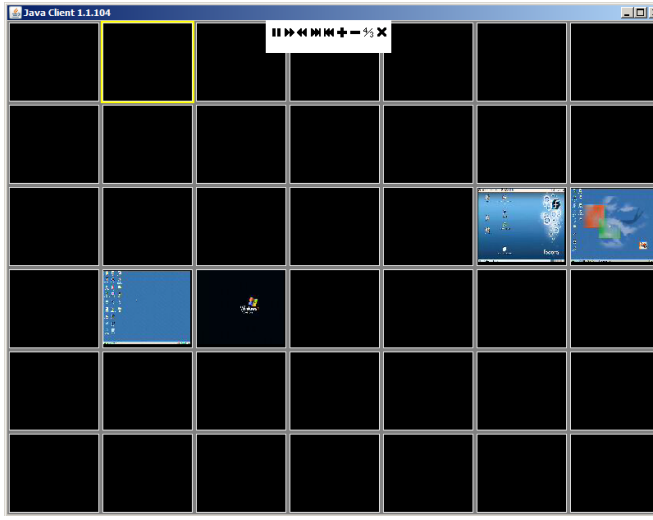

- Each panel represents one of the switch's ports beginning with Port 1 at the upper left, and going from left to right; top to bottom.
- The number of panels in the array can be selected by clicking the **Show More Ports**, and **Show Fewer Ports** symbols on the panel array toolbar (see the following page for an explanation of the panel array toolbar).
- Only ports that are accessible to the user are displayed. For ports that are not accessible, the panel is blank.
- If the server connected to a port is on line, its screen displays in its panel, otherwise the panel is blank.
- Mousing over a panel displays information about the port (port name, online status, port access status, and resolution).
- You can access a server connected to a port by moving the mouse pointer over its panel and clicking. You switch to the server exactly as if you had selected it from the Port Access page.

Panel Array Toolbar

The panel array toolbar provides shortcut navigation and control of the panel array. The toolbar can be dragged anywhere on the screen. Mousing over an icon brings up a “tooltip” that provides a short description of the icon’s function. The icon functions are described in the table below:

	Click and drag to move the toolbar. **Note:** This icon is only available with the Windows Clients. To move the Java Client toolbars, click on any empty space and drag.
	Pause panel scanning, leaving the focus on the panel that currently has it.
	Move back four panels.
	Move to the previous panel.
	Move to the next panel.
	Move ahead four panels.
	Show More Ports: Increase the number of panels in the array.
	Show Fewer Ports: Decrease the number of panels in the array.
4/3	Toggle 4/3 aspect ratio.
	Exit Panel Array mode.

Note: For issues affecting multiple user operation in Panel Array Mode, see *Multiuser Operation*, page 176.

Multiuser Operation

The KL1508Ai / KL1516Ai supports multiuser operation. When multiple users simultaneously access the switch from client computers, the rules of precedence that apply are shown in the following table:

Operation	Rule
General	The switches utilize a single shared bus implementation – although they support local and remote login at the same time, they do not support independent operation. If a local user logs in while a remote user has already opened a session, the local user sees the same screen that the remote user is working on
Auto Scan Mode	If a user has invoked Auto Scan Mode (see page 171), and then another user logs on, at first the new user sees the GUI Main Page – but as soon as he accesses any port, he automatically enters Auto Scan Mode (since he is sharing the bus with the original user). Any user can halt Auto Scan Mode by recalling the GUI Main Page. When this occurs, Auto Scan Mode stops and all the other users on the bus are switched to the port that was being accessed when Auto Scan Mode stopped.
Panel Array Mode	◆ If a user has invoked Panel Array Mode (see page 174), and then another user logs on, the new user sees the GUI Main Page – but as soon as he accesses any port, he automatically enters Panel Array Mode (since he is sharing the bus with the original user). ◆ Panel Array Mode continues until the original user stops it. (Administrators can override Panel Array Mode, however.) ◆ Only the user who starts Panel Array Mode can use the Skip Mode (see page 172), function. ◆ Only the user who starts Panel Array Mode can switch ports. Other users automatically switch to the ports that the original user selects. However, if one of the other users does not have access rights to the port that the original user switches to, that user will not be able to view the port. ◆ Individual users can increase or decrease the number of panels they wish to view in Panel Array Mode; however, the picture quality may decrease as the number of panels increases.

Chapter 17
The Log Server

The Windows-based Log Server is an administrative utility that records all the events that take place on selected KL1508Ai / KL1516Ai units and writes them to a searchable database. This chapter describes how to install and configure the Log Server.

Installation

1. From the computer that you want to use as the Log Server, open your browser and log into the KL1508Ai / KL1516Ai (see page 62).
2. Click the *Log Server* button at the left of the Webpage to start the Log Server installation program.
3. If any security warning dialog boxes appear, ignore them and click **Run** or **Open**.

Note: If the browser cannot run the file, save it to disk, instead, and run the file from your disk.

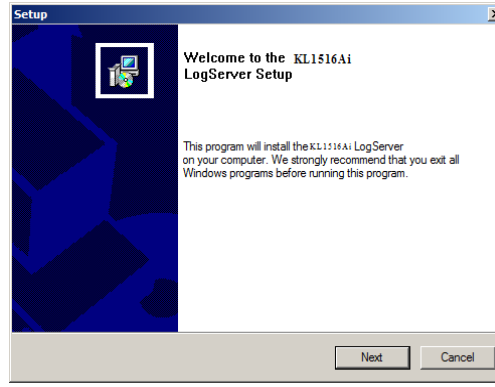

4. Click **Next**. Then follow the on-screen instructions to complete the installation and have the Log Server program icon placed on your desktop.

Starting Up

To bring up the Log Server, either double click the program icon, or key in the full path to the program on the command line. The first time you run it, a screen similar to the one below appears:

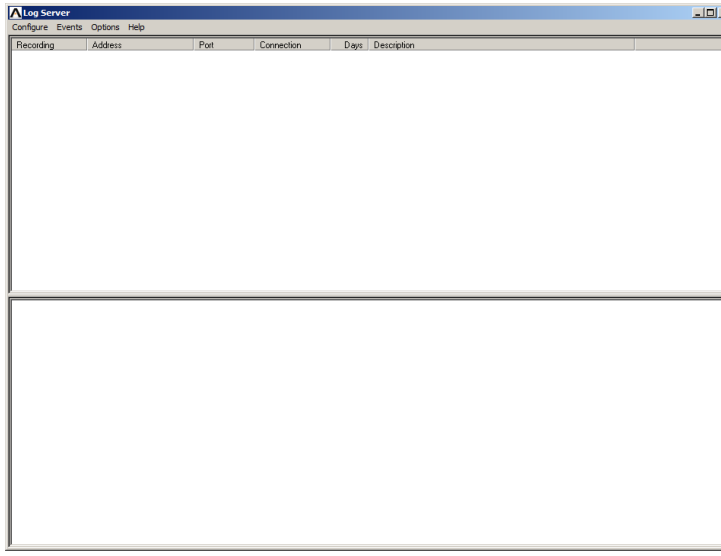

Note: 1. The MAC address of the Log Server computer must be specified on the *Service Configuration* page of the *Administrator Utility* (see page 127).

2. The Log Server requires the Microsoft Jet OLEDB 4.0 driver in order to access the database.

The screen is divided into three components:

- A *Menu Bar* at the top
- A panel that will contain a list of KL1508Ai / KL1516Ai units in the middle (see *The Log Server Main Screen*, page 183, for details).
- A panel that will contain an *Events List* at the bottom

Each of the components is explained in the sections that follow.

The Menu Bar

The Menu bar consists of four items:

- Configure
- Events
- Options
- Help

These are discussed in the sections that follow.

Note: If the Menu Bar appears to be disabled, click in the KL1508Ai / KL1516Ai List window to enable it.

Configure

The Configure menu contains three items: Add, Edit, and Delete. They are used to add new KL1508Ai / KL1516Ai units to the KL1508Ai / KL1516Ai List; edit the information for units already on the list; or delete KL1508Ai / KL1516Ai units from the list.

- To add a KL1508Ai / KL1516Ai to the KL1508Ai / KL1516Ai List, click **Add**.
- To edit or delete a listed KL1508Ai / KL1516Ai, first select the one you want in the KL1508Ai / KL1516Ai List window, then open this menu and click **Edit** or **Delete**.

When you choose *Add* or *Edit*, a dialog box, similar to the one below appears:

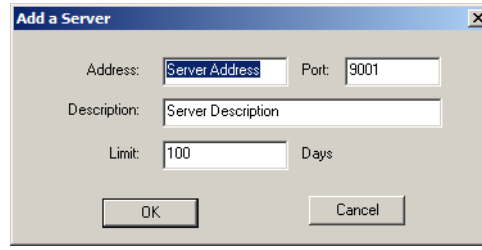

A description of the fields is given in the table, below:

Field	Explanation
Address	This can either be the IP address of the KL1508Ai / KL1516Ai or its DNS name (if the network administrator has assigned it a DNS name).
Port	The port number that was assigned to the Log Server in the KL1508Ai / KL1516Ai OSD (see *Log Server*, page 127).
Description	This field is provided so that you can put in a descriptive reference for the unit to help identify it.
Limit	This specifies the number of days that an event should be kept in the Log Server's database before it expires and it is cleared out.

Fill in or modify the fields, then click **OK** to finish.

Events

The Events Menu has two items: *Search* and *Maintenance*.

Search

Search allows you to search for events containing specific words or strings. When you access this function, a screen similar to the one below appears:

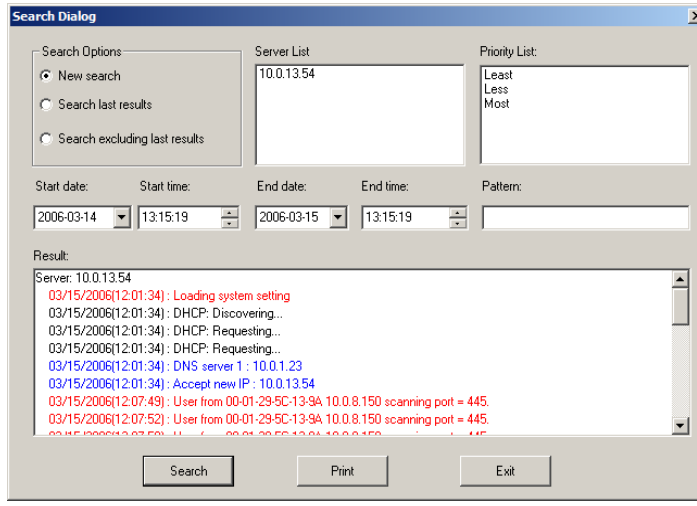

A description of the items is given in the table below:

Item	Explanation
New search	This is one of three radio buttons that define the scope of the search. If it is selected, the search is performed on all the events in the database for the selected KL1508Ai / KL1516Ai.
Search last results	This is a secondary search performed on the events that resulted from the last search.
Search excluding last results	This is a secondary search performed on all the events in the database for the selected KL1508Ai / KL1516Ai *excluding* the events that resulted from the last search.
Server List	KL1508Ai / KL1516Ai units are listed according to their IP address. Select the unit that you want to perform the search on from this list. You can select more than one unit for the search. If no units are selected, the search is performed on all of them.
Priority List	Sets the level for how detailed the search results display should be. 1 is the most general; 3 is the most specific.
Start Date	Select the date that you want the search to start from. The format follows the MM/DD/YYYY convention, as follows: 11/02/2011
Start Time	Select the time that you want the search to start from.
End Date	Select the date that you want the search to end at.
End Time	Select the time that you want the search to end at.
Pattern	Key in the pattern that you are searching for here. The multiple character wildcard (%) is supported. E.g., h%ds would match *hands* and *hoods*.
Results	Lists the events that contained matches for the search.
Search	Click this button to start the search.
Print	Click this button to print the search results.
Exit	Click this button to exit the Search dialog box.

Maintenance

This function allows the administrator to perform manual maintenance of the database, such as erasing specified records before the expiration time that was set with the *Limit* setting of the Edit function (see page 180).

Options

Network Retry allows you to set the number of seconds that the Log Server should wait before attempting to connect if the previous attempt to connect failed. When you click this item, a dialog box, similar to the one below appears:

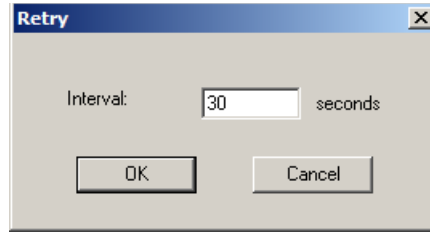

Key in the number of seconds, then click **OK** to finish.

Help

From the Help Menu, click **Contents** to access the online Windows Help file. The help file contains instructions about how to setup, operate and troubleshoot the Log Server.

The Log Server Main Screen

Overview

The Log Server Main Screen is divided into two main panels.

- The upper (List) panel lists the KL1508Ai / KL1516Ai units that have been selected for the Log Server to track (see *Configure*, page 179).
- The lower (Event) panel displays the log events for the currently selected KL1508Ai / KL1516Ai (the highlighted one - if there are more than one). To select a KL1508Ai / KL1516Ai unit in the list, simply click on it.

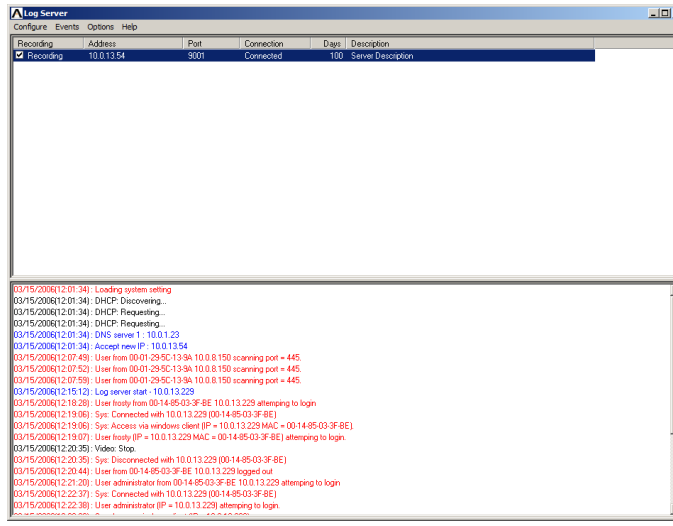

The List Panel

The List panel contains six fields:

Field	Explanation
Recording	Determines whether the Log Server records log events for this KL1508Ai / KL1516Ai or not. If the Recording check box is checked, the field displays *Recording*, and log events are recorded. If the Recording check box is not checked, the field displays *Paused*, and log events are not recorded. **Note:** Even though a KL1508Ai / KL1516Ai is not the currently selected one, if its Recording check box is checked, the Log Server will still record its log events.
Address	This is the IP Address or DNS name that was given to the KL1508Ai / KL1516Ai when it was added to the Log Server (see *Configure*, page 179).
Port	This is the port number that was assigned to the Log Server in the KL1508Ai / KL1516Ai OSD (see *Log Server*, page 127).
Connection	If the Log Server is connected to the KL1508Ai / KL1516Ai, this field displays *Connected*. If it is not connected, this field displays *Waiting*. This means that the Log Server's MAC address has not been set properly. It needs to be set on the *Service Configuration* page of the *Administrator Utility* (see page 127).
Days	This field displays the number of days that the KL1508Ai / KL1516Ai's log events are to be kept in the Log Server's database before expiration (see *Configure*, page 179).
Description	This field displays the descriptive information given for the KL1508Ai / KL1516Ai when it was added to the Log Server (see *Configure*, page 179).

The Event Panel

The lower panel displays tick information for the currently selected KL1508Ai / KL1516Ai. Note that if the installation contains more than one switch, even though a switch isn't currently selected, if its *Recording* checkbox is checked, the Log Server records its tick information and keeps it in its database.

Appendix

Safety Instructions

General

- This product is for indoor use only.
- Read all of these instructions. Save them for future reference.
- Follow all warnings and instructions marked on the device.
- Do not place the device on any unstable surface (cart, stand, table, etc.). If the device falls, serious damage will result.
- Do not use the device near water.
- Do not place the device near, or over, radiators or heat registers.
- The device cabinet is provided with slots and openings to allow for adequate ventilation. To ensure reliable operation, and to protect against overheating, these openings must never be blocked or covered.
- The device should never be placed on a soft surface (bed, sofa, rug, etc.) as this will block its ventilation openings. Likewise, the device should not be placed in a built in enclosure unless adequate ventilation has been provided.
- Never spill liquid of any kind on the device.
- Unplug the device from the wall outlet before cleaning. Do not use liquid or aerosol cleaners. Use a damp cloth for cleaning.
- The device should be operated from the type of power source indicated on the marking label. If you are not sure of the type of power available, consult your dealer or local power company.
- The device is designed for IT power distribution systems with 230V phase-to-phase voltage.
- To prevent damage to your installation it is important that all devices are properly grounded.
- The device is equipped with a 3-wire grounding type plug. This is a safety feature. If you are unable to insert the plug into the outlet, contact your electrician to replace your obsolete outlet. Do not attempt to defeat the purpose of the grounding-type plug. Always follow your local/national wiring codes.
- Do not allow anything to rest on the power cord or cables. Route the power cord and cables so that they cannot be stepped on or tripped over.

- If an extension cord is used with this device make sure that the total of the ampere ratings of all products used on this cord does not exceed the extension cord ampere rating. Make sure that the total of all products plugged into the wall outlet does not exceed 15 amperes.
- To help protect your system from sudden, transient increases and decreases in electrical power, use a surge suppressor, line conditioner, or uninterruptible power supply (UPS).
- Position system cables and power cables carefully; Be sure that nothing rests on any cables.
- Never push objects of any kind into or through cabinet slots. They may touch dangerous voltage points or short out parts resulting in a risk of fire or electrical shock.
- Do not attempt to service the device yourself. Refer all servicing to qualified service personnel.
- If the following conditions occur, unplug the device from the wall outlet and bring it to qualified service personnel for repair.
  - The power cord or plug has become damaged or frayed.
  - Liquid has been spilled into the device.
  - The device has been exposed to rain or water.
  - The device has been dropped, or the cabinet has been damaged.
  - The device exhibits a distinct change in performance, indicating a need for service.
  - The device does not operate normally when the operating instructions are followed.
- Only adjust those controls that are covered in the operating instructions. Improper adjustment of other controls may result in damage that will require extensive work by a qualified technician to repair.
- Do not connect the RJ-11 connector marked “UPGRADE” to a public telecommunications network.

Rack Mounting

- Before working on the rack, make sure that the stabilizers are secured to the rack, extended to the floor, and that the full weight of the rack rests on the floor. Install front and side stabilizers on a single rack or front stabilizers for joined multiple racks before working on the rack.
- Always load the rack from the bottom up, and load the heaviest item in the rack first.
- Make sure that the rack is level and stable before extending a device from the rack.
- Use caution when pressing the device rail release latches and sliding a device into or out of a rack; the slide rails can pinch your fingers.
- After a device is inserted into the rack, carefully extend the rail into a locking position, and then slide the device into the rack.
- Do not overload the AC supply branch circuit that provides power to the rack. The total rack load should not exceed 80 percent of the branch circuit rating.
- Make sure that all equipment used on the rack - including power strips and other electrical connectors - are properly grounded.
- Ensure that proper airflow is provided to devices in the rack.
- Ensure that the operating ambient temperature of the rack environment does not exceed the maximum ambient temperature specified for the equipment by the manufacturer.
- Do not step on or stand on any device when servicing other devices in a rack.
- **Caution:** Slide/rail (LCD KVM) mounted equipment is not to be used as a shelf or a work space.

Technical Support

Technical support is available both by email and online (with a browser over the web):

International

- For online technical support – including troubleshooting, documentation, and software updates: **http://support.aten.com**
- For telephone support, see *Telephone Support*, page iv:

North America

Email Support		support@aten-usa.com
Online Technical Support	Troubleshooting Documentation Software Updates	http://support.aten.com
Telephone Support		1-888-999-ATEN ext 4988

When you contact us, please have the following information ready beforehand:

- Product model number, serial number, and date of purchase.
- Your computer configuration, including operating system, revision level, expansion cards, and software.
- Any error messages displayed at the time the error occurred.
- The sequence of operations that led up to the error.
- Any other information you feel may be of help.

Specifications

Function			KL1508Ai	KL1516Ai
Computer Connections	Direct		8	16
	Max.		128 (via Daisy Chain)	256 (via Daisy Chain)
Console Connections	Local		1	
	Remote			
Port Selection			OSD, Hotkeys, Pushbutton	
Connectors	Console Ports	Keyboard	1 x 6-pin Mini-DIN Female (Purple) 1 x USB Type-A Female (White)	
		Video	1 x HDB-15 Female (Blue)	
		Mouse	1 x 6-pin Mini-DIN Female (Green) 1 x USB Type-A Female (White)	
	KVM Ports		8 x RJ-45 Female	16 x RJ-45 Female
	Daisy Chain		1 x DB-25 Male (Black)	
	Power		1 x 3-prong AC socket	
	F/W Upgrade		1 x RJ-11 Female (Black)	
	External Mouse		1 x USB Type A Female	
	LAN		1 x RJ-45 Female	
	PoN		1 x RJ-45 Female	
Switches	Power		1 x Rocker	
	LCD Power		1 x Pushbutton	
	LCM Adjustment		4 x Pushbutton	
	Port Selection		8 x Pushbutton	16 x Pushbutton
	FW Upgrade		1 x Slide	
	KVM Reset		1 x Semi-recessed Pushbutton	
	Station		2 x Pushbutton	

Function			KL1508Ai	KL1516Ai
LEDs	Station ID		2 x 7 Segments (Orange)	
	Port	Online	8 (Green)	16 (Green)
		Selected	8 (Orange)	16 (Orange)
	Power		1 (Blue)	
	Lock	Num	1 (Green)	
		Caps	1 (Green)	
		Scroll	1 (Green)	
	Link		1 (Green)	
	10/100/1000 Mbps		non-FHD: 10/100 Mbps (Orange/Green) FHD: 100/1000 Mbps (Orange/Green)	
	LCD Power		1 (Orange)	
Emulation	Keyboard/Mouse		PS/2; USB	
Video			1280 x 1024 @ 75 Hz; DDC2B (50m*, Local); 1600 x 1200 @ 60 Hz; DDC2B (40m*, Remote)	
Panel Spec	LCD Module		17" TFT-LCD / 19" TFT-LCD	
	Resolution		1280 x 1024 @ 75Hz	
	Pixel Pitch		0.264 mm x 0.264 mm / 0.294 mm x 0.294 mm	
	Response Time		5 ms	
	Viewing Angle		170° (H), 160° (V)	
	Support Color		16.7M Colors	
	Contrast Ratio		1000:1	
	Luminance		250 cd/m²	
Scan Interval			1 - 255 sec.	
Input			100 - 240 V AC; 50 - 60 Hz; 1 A	

Function			KL1508Ai	KL1516Ai
Power Consumption			AC110V:21.1W:110BTU/h AC220V:22.2W:115BTU/h (17”) AC110V:24.3W:125BTU/h AC220V:24.5W:126BTU/h (19”)	AC110V:21.2W:110BTU/h AC220V:23.1W:119BTU/h (17”) AC110V:24.4W:125BTU/h AC220V:25.4W:130BTU/h (19”)
			Note: ◆ The measurement in Watts indicates the typical power consumption of the device with no external loading. ◆ The measurement in BTU/h indicates the power consumption of the device when it is fully loaded.	
Environment	Operating Temp		0 – 40 ^{o}C	
	Storage Temp		-20 – 60 ^{o}C	
	Humidity		0–80% RH; Non-condensing	
Physical Properties	Housing		Metal	
	Weight	17” LCD	15.23 kg (33.55 lb)	15.24 kg (33.57 lb)
		19” LCD	15.39 kg (33.9 lb)	15.40 kg (33.92 lb)
	Dimensions (L x W x H)		48.00 x 70.12 x 4.40 cm (18.9 x 27.61 x 1.73 in)	

*With KVM Adapter Cable KA7000 series.

IP Address Determination

If you are an administrator logging in for the first time, you need to access the KL1508Ai / KL1516Ai in order to give it an IP address that users can connect to. There are three methods to choose from. In each case, your client computer must be on the same network segment as the KL1508Ai / KL1516Ai. After you have connected and logged in you can give the KL1508Ai / KL1516Ai its fixed network address. (See *Network*, page 123.)

The Local Console

The easiest way to assign an IP address is from the local console. Refer to *SET IP ADDRESS*, page 44, for details on the procedure involved.

IP Installer

For client computers running Windows, an IP address can be assigned with the *IP Installer* utility. The utility can be obtained from the *Download* area of our website. Look under *Driver/SW*, and the model of your switch. After downloading the utility to your client computer, do the following:

1. Unzip the contents of *IPInstaller.zip* to a directory on your hard drive.
2. Go to the directory that you unzipped the IPInstaller program to and run *IPInstaller.exe*. A dialog box similar to the one below appears:

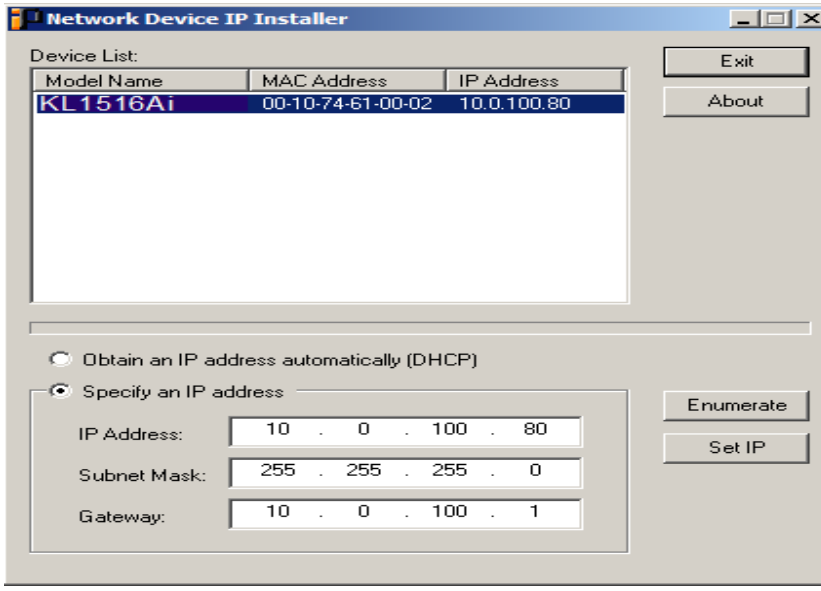

3. Select the KL1508Ai / KL1516Ai in the *Device List*.

Note: 1. If the list is empty, or your device doesn't appear, click **Enumerate** to refresh the Device List.

2. If there is more than one device in the list, use the MAC address to pick the one you want.

4. Select either *Obtain an IP address automatically (DHCP)*, or *Specify an IP address*. If you chose the latter, fill the IP Address, Subnet Mask, and Gateway fields with the information appropriate to your network.
5. Click **Set IP**.
6. After the IP address shows up in the Device List, click **Exit**. See *IP Installer*, page 124 for more information.

Browser

1. Set your client computer's IP address to 192.168.0.*XXX*

   Where *XXX* represents any number or numbers except 60. (192.168.0.60 is the default address of the KL1508Ai / KL1516Ai.)
2. Specify the switch's default IP address (192.168.0.60) in your browser, and you will be able to connect.
3. Assign a fixed IP address for the KL1508Ai / KL1516Ai that is suitable for the network segment that it resides on.

After you log out, reset your client computer's IP address to its original value.

IPv6

At present, the KL1508Ai / KL1516Ai supports three IPv6 address protocols: *Link Local IPv6 Address*, *IPv6 Stateless Autoconfiguration*, and *Stateful Autoconfiguration (DHCPv6)*.

Link Local IPv6 Address

At power on, the KL1508Ai / KL1516Ai is automatically configured with a Link Local IPv6 Address (for example, fe80::210:74ff:fe61:1ef). To find out what the Link Local IPv6 Address is, log in with the KL1508Ai / KL1516Ai IPv4 address and open the *Device Management* → *Device Information* page. The address is displayed in the *General* list box (see page 122).

Once you have determined what the IPv6 address is, you can use it when logging in from a browser or the Win and Java Client AP programs.

For example:

If you are logging in from a browser, you would key in

```
http://[fe80::2001:74ff:fe6e:59%5]
```

for the URL bar.

If you are logging in with the AP program, you would key:

```
fe80::2001:74ff:fe6e:59%5
```

for the *IP* field of the *Server* panel (see *Windows Client AP Login*, page 63).

Note: 1. To log in with the Link Local IPv6 Address, the client computer must be on the same local network segment as the KL1508Ai / KL1516Ai

2. The %5 is the %interface used by the client computer. To see your client computer's IPv6 address: from the command line issue the following command: `ipconfig /all`. The % value appears at the end of the IPv6 address.

IPv6 Stateless Autoconfiguration

If the KL1508Ai / KL1516Ai network environment contains a device (such as a router) that supports the IPv6 Stateless Autoconfiguration function, the KL1508Ai / KL1516Ai can obtain its prefix information from that device in order to generate its IPv6 address. For example, 2001::74ff:fe6e:59.

As above, the address is displayed in the *General* list box of the *Device Management* → *Device Information* page (see page 122).

Once you have determined what the IPv6 address is, you can use it when logging in from a browser or the Win and Java Client AP programs.

For example:

If you are logging in from a browser, you would key in

```
http://[2001::74ff:fe6e:59]
```

for the URL bar.

If you are logging in with the AP program, you would key:

```
2001::74ff:fe6e:59
```

for the *IP* field of the *Server* panel (see *Windows Client AP Login*, page 63).

Trusted Certificates

Overview

When you try to login to the KL1508Ai / KL1516Ai from your Web browser, a Security Alert message appears to inform you that the device's certificate is not trusted, and asks if you want to proceed.

The certificate can be trusted, but the alert is triggered because the certificate's name is not found on Microsoft's list of Trusted Authorities. You have two options: 1) you can ignore the warning and click **Yes** to go on; or 2) you can install the certificate and have it be recognized as trusted.

- If you are working on a computer at another location, accept the certificate for just this session by clicking **Yes.**
- If you are working at your own computer, install the certificate on your computer (see below for details). After the certificate is installed, it will be recognized as trusted.

Installing the Certificate

To install the certificate:

1. In the **Security Alert** dialog box, click **View Certificate.** The **Certificate** dialog box appears.

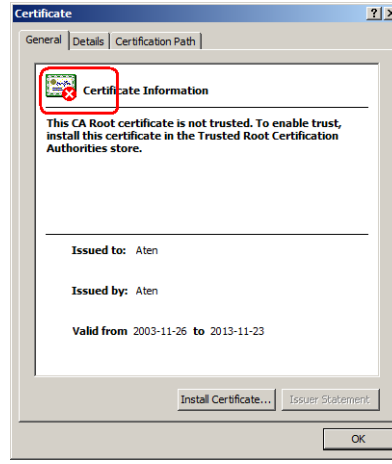

Note: There is a red and white **X** logo over the certificate to indicate that it is not trusted.

2. Click **Install Certificate.**
3. Follow the Installation Wizard to complete the installation. Unless you have a specific reason to choose otherwise, accept the default options. The Wizard presents a caution screen:

4. Click **Yes.**

5. Click **Finish** to complete the installation.
6. Click **OK** to close the dialog box.

Certificate Trusted

The certificate is now trusted:

When you click **View Certificate,** you can see that the red and white **X** logo is no longer present – further indication that the certificate is trusted.

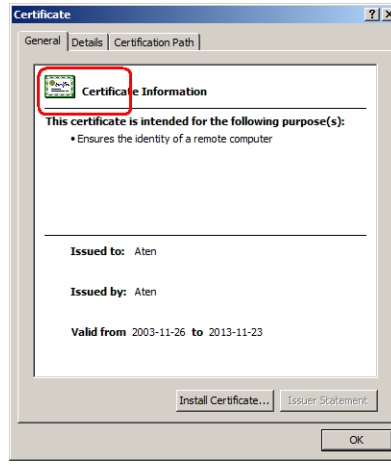

Self-Signed Private Certificates

If you wish to create your own self-signed encryption key and certificate, a free utility – openssl.exe – is available for download over the web at **www.openssl.org**. To create your private key and certificate do the following:

1. Go to the directory where you downloaded and extracted *openssl.exe* to.
2. Run openssl.exe with the following parameters:

```
openssl req -new -newkey rsa:1024 -days 3653 -nodes -x509
-keyout CA.key  -out CA.cer -config openssl.cnf
```

Note: 1. The command should be entered all on one line (i.e., do not press [Enter] until all the parameters have been keyed in).

2. If there are spaces in the input, surround the entry in quotes (e.g., "ATEN International").

To avoid having to input information during key generation the following additional parameters can be used: **/C /ST /L /O /OU /CN /emailAddress**.

Examples

```
openssl req -new -newkey rsa:1024 -days 3653 -nodes -x509
-keyout CA.key  -out CA.cer -config openssl.cnf -subj
/C=yourcountry/ST=yourstateorprovince/L=yourlocationor
city/O=yourorganiztion/OU=yourorganizationalunit/
CN=yourcommonname/emailAddress=name@yourcompany.com
```

```
openssl req -new -newkey rsa:1024 -days 3653 -nodes -x509
-keyout CA.key  -out CA.cer -config openssl.cnf -subj
/C=CA/ST=BC/L=Richmond/O="ATEN International"/OU=ATEN
/CN=ATEN/emailAddress=eservice@aten.com.tw
```

Importing the Files

After the openssl.exe program completes, two files – CA.key (the private key) and CA.cer (the self-signed SSL certificate) – are created in the directory that you ran the program from. These are the files that you upload in the *Private Certificate* panel of the Security page (see page 138).

Troubleshooting

Administration

Problem	Resolution
After upgrading firmware, the KL1508Ai / KL1516Ai still appears to be using the old firmware version.	Your Internet browser is displaying cached web pages – not new ones. Clear your browser cache; delete all temporary Internet files and cookies, close the Internet browser, and then open a new instance of the browser.
The default network setting for the KL1508Ai / KL1516Ai is DHCP, but the network uses fixed IP addresses and doesn't have a DHCP server.	Use the local console OSD's F4 function to give the KL1508Ai / KL1516Ai a fixed IP address. See page 123, for details.

General Operation

Problem	Resolution
Erratic Operation	Press and hold the Reset Switch (see page 11) for longer than three seconds.
Mouse and/or keyboard not responding due to improper mouse and/or keyboard reset.	Unplug the cable(s) from the console port(s), then plug it back in again.
Sudden loss of network connection due to local reset of KL1508Ai / KL1516Ai.	Close your KL1508Ai / KL1516Ai connection. Wait approximately 30 seconds, and log in again.
Mouse Pointer Confusion	If you find the display of two mouse pointers (local and remote) to be confusing or annoying, you can use the *Toggle Mouse Display* function to shrink the non-functioning pointer. See page 78 for details.
Some characters that are keyed in don't display on the remote system	This is usually due to the local OS keyboard language and the remote OS keyboard language being different. Make sure that the keyboard language for both systems are the same.
Keyboard and/or mouse do not work after computer boots up.	For computers with PS/2 connectors, if you are using 2L-520xP cables, make sure that all the connectors (keyboard, video, and mouse) are plugged into their ports on the computer before starting the computer. Plugging the cables in after the computer has booted will not resolve the problem.

Problem	Resolution
When I emulate the Sun keyboard, I can't go into OK Mode ([Stop] [A]).	To go into OK Mode, use the following key sequence: 1. Press and release [Ctrl]. 2. Press and hold [T]. 3. Press and hold [A]. 4. Release [T] and [A] together.
There are ghost images on the external monitor.	The distance between the external console and the KL1508Ai / KL1516Ai is too great. The maximum VGA cable distance should not exceed 20m and, in some cases, may need to be shorter. Replace the VGA cable with one of an appropriately short length.
I can't set the computers' screen resolutions higher than 1280 x 1024, even though the KL1508Ai / KL1516Ai supports 1600 x 1200 for remote computers.	The maximum screen resolution of the KL1508Ai / KL1516Ai's integrated LCD monitor is 1280 x 1024. In order to protect it from being damaged by resolutions that are beyond its display capability, we recommend that the screen resolutions of the connected computers be set to 1280 x 1024 or lower. If you wish to set the screen resolutions of the connected computers to something higher than 1280 x 1024, see *Screen Resolutions Higher than 1280 x 1024*, page 205.
When I switch to one of the computers on my installation, the LCD monitor screen goes blank. All I see is a black screen.	The maximum screen resolution of the KL1508Ai / KL1516Ai's integrated LCD monitor is 1280 x 1024. The screen resolution of the problem computer is set to something that is too high for the KL1508Ai / KL1516Ai's LCD monitor to display. To resolve the problem, connect an external KVM console (with a monitor capable of displaying the problem computer's screen resolution) to the KL1508Ai / KL1516Ai's external console ports. Use the external console to access the problem computer and reduce its resolution to 1280 x 1024. **Note:** Although the LCD monitor only supports video resolutions of up to 1280 x 1024, the KL1508Ai / KL1516Ai, itself can support video resolutions up to 1600 x 1200 @ 60 Hz. If you wish to set the screen resolutions of the connected computers to something higher than 1280 x 1024, see *Screen Resolutions Higher than 1280 x 1024*, page 205 for details.

The Windows Client

Problem	Resolution
Won't connect to the KL1508Ai / KL1516Ai.	DirectX 8.0 or higher must be installed on your computer.
Remote mouse pointer is out of sync.	1. Use the *AutoSync* feature (see *Video Settings*, page 86), to sync the local and remote monitors. 2. If that doesn't resolve the problem, use the *Adjust Mouse* feature (see *Manual Mouse Synchronization*, page 96) to bring them back in sync. 3. If the two methods described above fail to resolve the problem, use the *Toggle Mouse Display* function (see page 78).
Part of remote window is off my monitor.	Use the *AutoSync* feature (see *Video Settings*, page 86) to synchronize the local and remote monitors.
My antivirus program reports that there is a trojan after I access the KL1508Ai / KL1516Ai with my browser and then open the Windows Client Viewer.	The Windows Client Viewer uses an ActiveX plug-in (windows.ocx) that some antivirus programs mistakenly see as a virus or trojan. We have tested our firmware extensively and found no evidence of a virus or trojan. You can add the plug-in to your antivirus program's White List and use the Viewer safely. If you are reluctant to use the Windows Client Viewer, however, you can simply use the Java Client Viewer, instead.

The Java Client

For connection and operation problems, see the table below:

Problem	Resolution
Java Client won't connect to the KL1508Ai / KL1516Ai.	1. Java JRE 6 update 3 or higher must be installed on your computer. 2. Make sure to include the correct name of the web page when you specify the KL1508Ai / KL1516Ai's IP address. 3. Close the Java Client, reopen it, and try again.
Pressing the Windows Menu key has no effect.	Java doesn't support the Windows Menu key.
Java Client performance deteriorates.	Exit the program and start again.
National language characters do not appear.	When entering national language characters, if your local keyboard is set to a non-English national language layout, you must set the remote computer's keyboard layout to English.

The Log Server

Problem	Resolution
The Log Server program does not run.	The Log Server requires the Microsoft Jet OLEDB 4.0 driver in order to access the database. This driver is automatically installed with Windows ME, 2000, and XP. For Windows 98 and NT you will have to go to the Microsoft download site: http://www.microsoft.com/data/download.htm to retrieve the driver file: ***MDAC 2.7 RTM Refresh (2.70.9001.0)*** Since this driver is used in Windows Office Suite, an alternate method of obtaining it is to install Windows Office Suite. Once the driver file or Suite has been installed, the Log Server will run.

Panel Array Mode

Problem	Resolution
Low resolution video in Panel Array Mode.	Increase the number of panels that are displayed.
Some users only receive a partial image when multiple remote users are logged in concurrently.	The first user to invoke Panel Array Mode should set it to display a minimum of four panels.

Sun Systems

Problem	Resolution
Video display problems with HDB-15 interface systems (e.g. Sun Blade 1000 servers).	The display resolution should be set to 1024 x 768. Under Text Mode: 1. Go to **OK mode** and issue the following commands: setenv output-device screen:r1024x768x60 reset-all Under XWindow: 1. Open a console and issue the following command: m64config -res 1024x768x60 2. Log out. 3. Log in.
Video display problems with 13W3 interface systems (e.g. Sun Ultra servers).*	The display resolution should be set to 1024 x 768. Under Text Mode: 1. Go to **OK mode** and issue the following commands: setenv output-device screen:r1024x768x60 reset-all Under XWindow: 1. Open a console and issue the following command: ffbconfig -res 1024x768x60 2. Log out. 3. Log in.

* These solutions work for most common Sun VGA cards. If using them fails to resolve the problem, consult the Sun VGA card's manual.

Screen Resolutions Higher than 1280 x 1024

The maximum screen resolution of the KL1508Ai / KL1516Ai's integrated LCD monitor is 1280 x 1024. In order to protect it from being damaged by resolutions that are beyond its display capability, we recommend that the screen resolutions of the connected computers be set to 1280 x 1024 or lower.

If you wish to display screen resolutions higher than 1280 x 1024, follow the procedure described below to change the computers' screen resolutions and safeguard the KL1508Ai / KL1516Ai's LCD monitor:

Note: We strongly recommend that you close the KL1508Ai / KL1516Ai LCD console before continuing (see *Closing the Console*, page 29.) Using the LCD monitor to view computers that are set to resolutions that exceed its maximum capability can damage it and shorten its life span.

To access computers from the local console when the integrated console is closed, simply connect an external KVM console with a monitor that supports 1600 x 1200 @ 60 Hz to the KL1508Ai / KL1516Ai's external console ports.

1. From a remote computer, log into the KL1508Ai / KL1516Ai and access the computer whose screen resolution you wish to change.
2. Open the computer's *Control Panel* and double-click **Display.** The *Display Properties* dialog box appears.
3. Click the **Settings** tab, and then click **Advanced.**
4. In the dialog box that appears, click the **Monitor** tab.
5. Under *Monitor settings***,** click to clear the *Hide modes that this monitor cannot display* check box.
6. Click **Apply.**
7. Click the **Adapter** tab, and then click **List All Modes.** The *List All Modes* dialog box appears.
8. Under *List of valid modes***,** select the display mode that you want the computer to use.

Note: The maximum screen resolution and refresh rate that the KL1508Ai / KL1516Ai supports for remote computers is 1600 x 1200@60 Hz.

9. Click **OK,** and then click **Apply.** The display mode changes to the one you selected.
10. If the *Monitor Settings* dialog box appears requesting you to confirm the settings change, click **Yes.**
11. After the Monitor Settings dialog box closes, click **OK.**
12. In the Display Properties dialog box, click **OK.**

This completes the procedure. Repeat these steps for any other computer whose screen resolution you wish to change.

Additional Mouse Synchronization Procedures

If the mouse synchronization procedures mentioned in the manual fail to resolve mouse pointer problems for particular computers, try the following:

Note: 1. These procedures are to be performed on the computers attached to the KL1508Ai / KL1516Ai's ports - not on the computer you are using to access the KL1508Ai / KL1516Ai.

2. In order for the local and remote mice to synchronize, you must use the generic mouse driver supplied with the Windows operating system. If you have a third party driver installed - such as one supplied by the mouse manufacturer - you must remove it.

Windows:

1. Windows 2000:

   a) Open the Mouse Properties dialog box (Control Panel → Mouse → Mouse Properties)

   b) Click the *Motion* tab

   c) Set the mouse speed to the middle position (6 units in from the left)

   d) Set the mouse acceleration to *None*

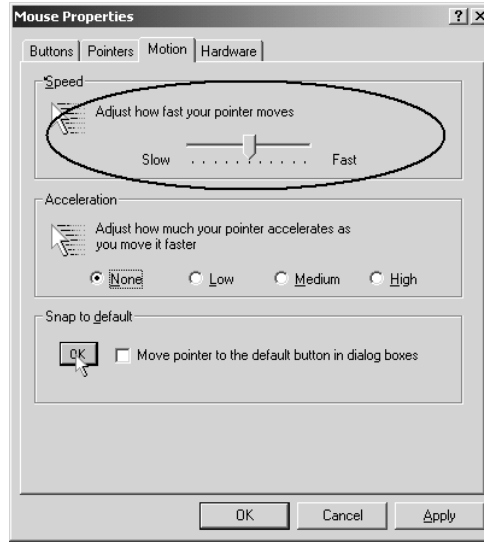

2. Windows XP / Windows Server 2003:

   a) Open the Mouse Properties dialog box (Control Panel → Mouse)

   b) Click the *Pointer Options* tab

   c) Set the mouse speed to the middle position (6 units in from the left)

   d) Disable *Enhance Pointer Precision*

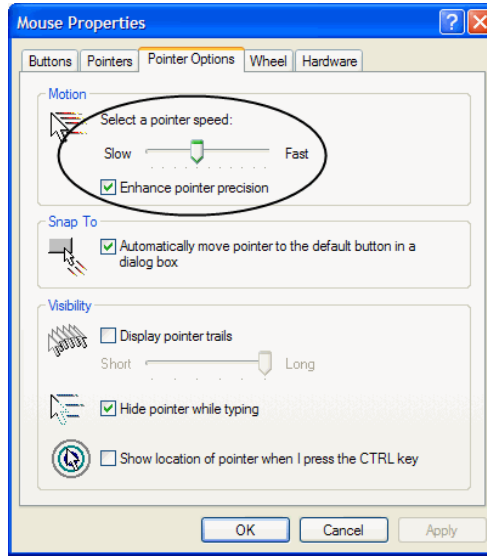

3. Windows ME:

   Set the mouse speed to the middle position; disable mouse acceleration (click **Advanced** to get the dialog box for this).

4. Windows NT / Windows 98 / Windows 95:

   Set the mouse speed to the slowest position.

Sun / Linux:

Open a terminal session and issue the following command:

Sun: `xset m 1`

Linux: `xset m 0`

Connection Tables

The following table indicates the relationship between the number of compatible KVM Switch units and the number of computers that they control

KL1508Ai

No.	Computers	No.	Computers
1	1 - 8	9	65 - 72
2	9 - 16	10	73 - 80
3	17 - 24	11	81 - 88
4	25 - 32	12	89 - 96
5	33 - 40	13	97 - 104
6	41 - 48	14	105 - 112
7	49- 56	15	113 - 120
8	57 - 64	16	121 - 128

KL1516Ai

No.	Computers	No.	Computers
1	1 - 16	9	129 - 144
2	17 - 32	10	145 - 160
3	33 - 48	11	161 - 176
4	49 - 64	12	177 - 192
5	65 - 80	13	193 - 208
6	81 - 96	14	209 - 224
7	97- 112	15	225 - 240
8	113 - 128	16	241 - 256

Supported Devices

The following table represents a list of supported devices that can be used on a KL1508Ai / KL1516Ai installation.

Type	
Daisy Chain Switches	KH1508A; KH1516A; KH1508; KH1516; ACS1208A; ACS1216A; CS1708A; CS1716A
PoN	PN0108
Central Control	CC2000

Note: To connect the KL1508Ai / KL1516Ai to a Power Over the NET™ unit, first use Cat 5e cable to connect the KL1508Ai / KL1516Ai's PoN port to an SN0142 adapter; then, connect the adapter to the PoN In port on the Power Over the NET™ unit.

Administrator Login Failure

If you are unable to perform an Administrator login (because the Username and Password information has become corrupted or you have forgotten it, for example) you can clear the login information with the following procedure:

1. Power off the KL1508Ai / KL1516Ai and remove its housing.
2. Short the jumper labeled **J15**.

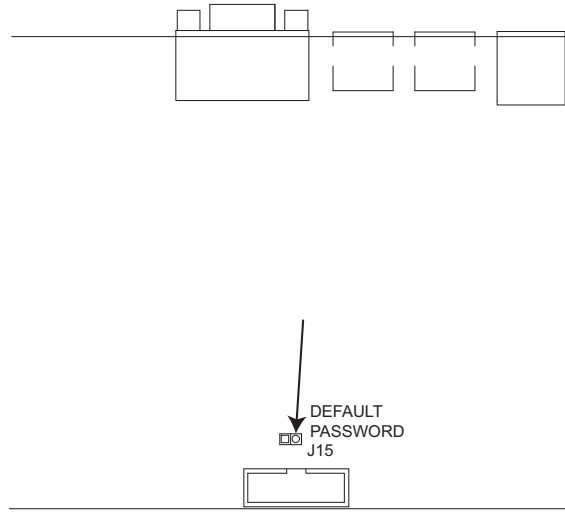

3. Power on the switch.

   The on screen display will show a message informing you that the password information has been cleared.
4. Power off the switch.
5. Remove the jumper cap from **J15**.
6. Close the housing and start the KL1508Ai / KL1516Ai back up.

After you start back up, you can use the default Username and Password (see *OSD Overview*, page 37) to log in.

Optional Rack Mounting

For convenience and flexibility, three optional rack mount kits are available as shown in the following table:

KVM Model	Bracket Type	Size (cm)
KL1508Ai / KL1516Ai (17” LCD)	Standard Installation – Long	68.0—105.0
	Easy Installation – Short	57.0—70.0
	Easy Installation – Long	68.0—105.0
KL1508Ai / KL1516Ai (19” LCD)	Standard Installation – Long	68.0—105.0
	Easy Installation – Short	63.0—70.0
	Easy Installation – Long	74.0—105.0

To install the long bracket standard rack mount kit, simply replace the short L brackets on the standard rack mount kit with the long ones, and mount the switch according to the instructions given for *Standard Rack Mount*, page 16.

While it takes two people to perform a standard installation, with an *Easy-Installation*, kit, one person can mount the switch. To install the *Easy-Installation* kit, do the following:

1. Remove the standard L brackets and the side mounting brackets from both sides of the switch.

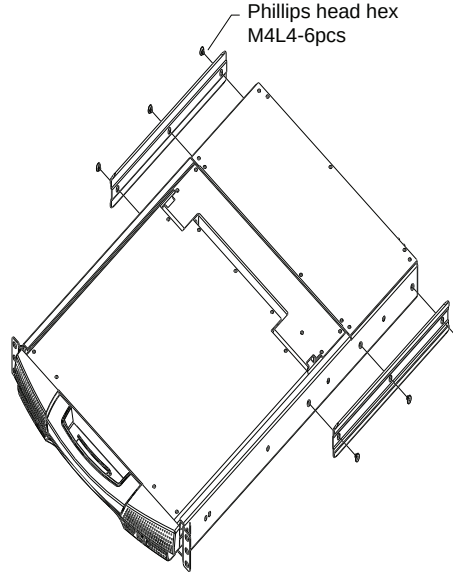

2. Attach the left and right *easy-installation* mounting rails to the inside of the rack. The flange that supports the switch will be to the inside.

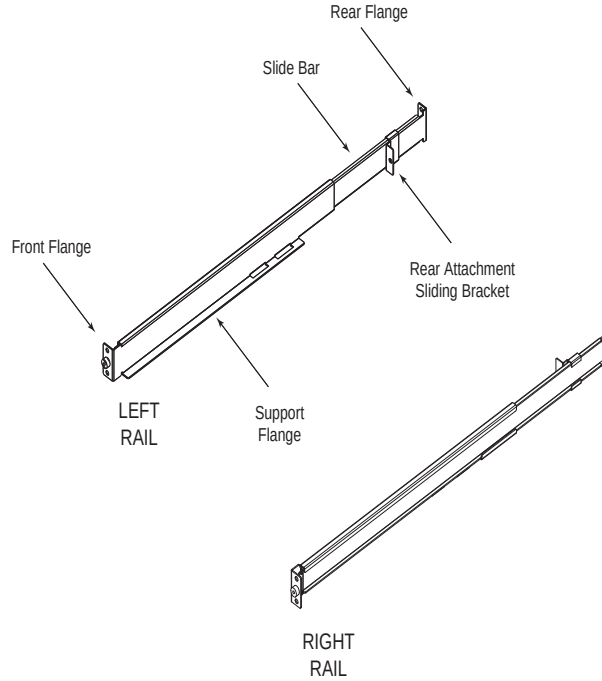

a) Screw the front flanges to the rack first.

b) Slide the bars with the rear flanges toward the rack until the flanges make contact with the rack, then screw the rear flanges to the rack.

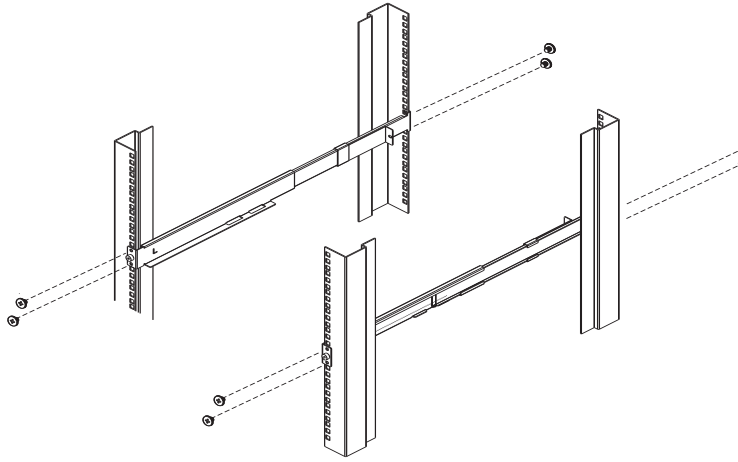

3. Slide the switch onto the support flanges. Use the screws supplied with this package to loosely attach the front of the switch to the front of the rack (only tighten the screws part way).

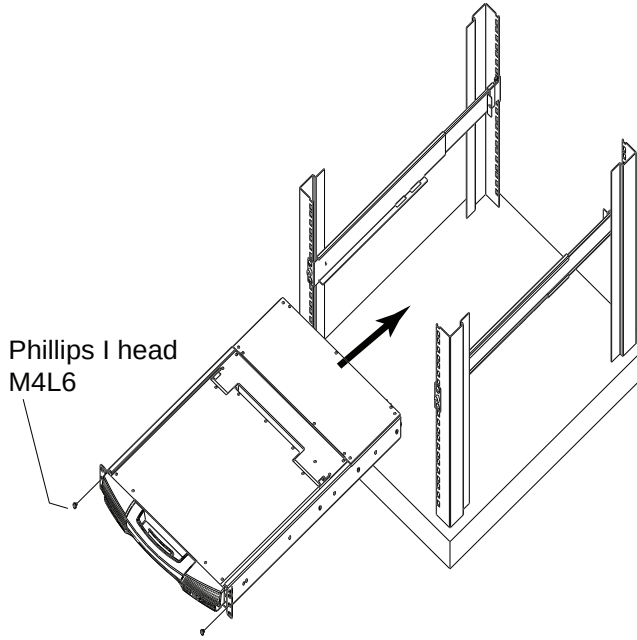

4. Slide the rear attachment sliding brackets along the slide bars until they contact the rear of the switch, then use the screws supplied with this package to attach the bars to the rear of the switch (tighten the screws all the way).

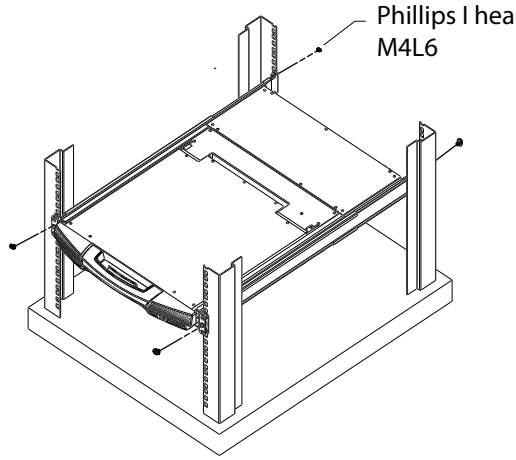

5. Slide the switch open and closed a couple of times to be sure that it is properly aligned and operating smoothly. (See *Opening the Console*, page 25 for opening and closing procedures.)
6. After determining that the switch is properly lined up and operating correctly, finish up by fully tightening down the partially tightened front attachment screws inserted in step 3.

Dedicated Invocation Keys

Two dedicated keys are provided on the keyboard module to make it easy to invoke Hotkey Mode and the OSD (as shown in the diagram below):

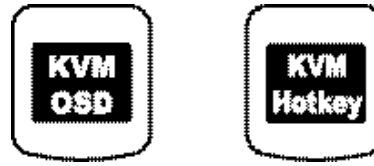

Note: These keys are toggles. Press once to invoke the feature; press again to exit.

OSD Factory Default Settings

The factory default settings are as follows:

Setting	Default
OSD Hotkey	[Scroll Lock] [Scroll Lock]
Port ID Display Position	Upper Left Corner
Port ID Display Duration	3 Seconds
Port ID Display Mode	The Port Number plus the Port Name
Scan Duration	5 Seconds
Scan/Skip Mode	All
Screen Blanker	OFF
Hotkey Command Mode	ON
Hotkey	[Num Lock] + [-]
Logout Timeout	OFF
Beeper	ON
OSD Language	English

ATEN Warranty Policy

The warranty policy may vary by product category and region of purchase. For details, please visit ATEN's official website, select your purchase counties/regions and then go to the Support Center, or contact your local ATEN sales representative for further assistance.

© Copyright 2026 ATEN® International Co., Ltd.
Released: 2026-09-01

ATEN and the ATEN logo are registered trademarks of ATEN International Co., Ltd. All rights reserved.
All other brand names and trademarks are the registered property of their respective owners.