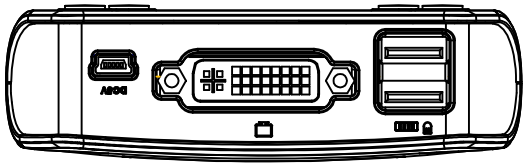

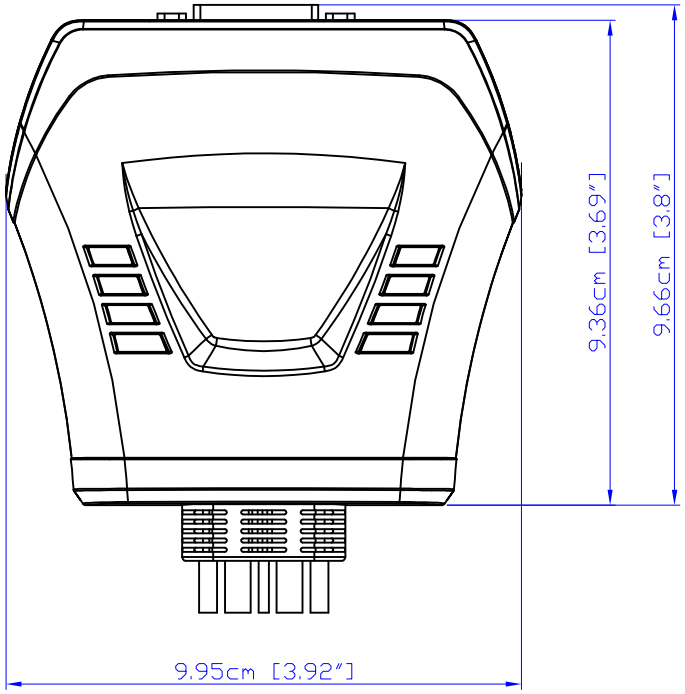

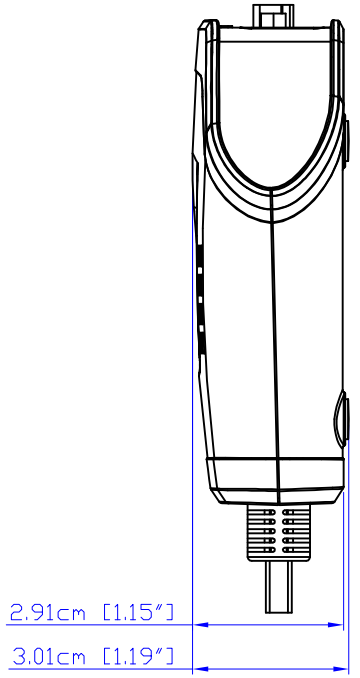

ATEN

CS22D